WABCO

Commercial Vehicle Aftermarket

Service Parts Catalog

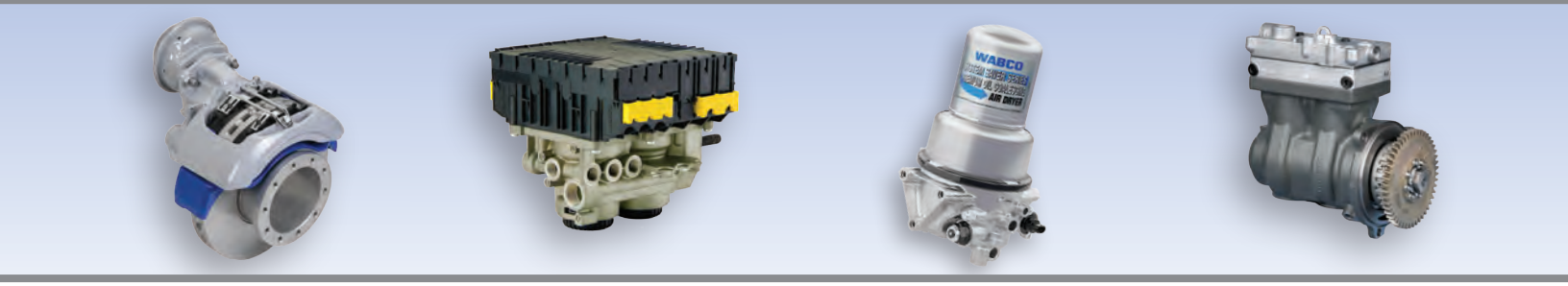

www.wabco-na.com

WABCO

ABS 1
HPB/HABS 2
AIR DRYERS 3
AIR VALVES 4
CLUTCH CONTROLS 5
COMPRESSORS 6
ADVANCED DRIVER ASSISTANCE SYSTEMS 7
EBS TRACTOR AND TRAILER 8
OPTIRIDE (ECAS TRUCK AND BUS) 9
RETROFIT KITS 10
DIAGNOSTIC SOFTWARE 11
WHEELEND 12
OPTITIRE 13
MICO 14
CROSS REFERENCE 15

UNDERSTANDING WABCO PART NUMBERS:

New components — designated by any digit at the end of the part number

Service Exchange components — designated by a “7” or "V" (comprised of new components with a core charge)

Remanufactured components — designated by a “R” at the end of the part number (includes a core charge)

ABOUT ZF FRIEDRICHSHAFEN AG

ZF is a global technology company and supplies systems for passenger cars, commercial vehicles and industrial technology, enabling the next generation of mobility. ZF allows vehicles to see, think and act. In the four technology domains Vehicle Motion Control, Integrated Safety, Automated Driving, and Electric Mobility, ZF offers comprehensive solutions for established vehicle manufacturers and newly emerging transport and mobility service providers. ZF electrifies different kinds of vehicles. With its products, the company contributes to reducing emissions and protecting the climate.

ZF, which acquired WABCO Holdings Inc. on May 29, 2020, now has 162,000 employees worldwide with approximately 260 locations in 41 countries. In 2019, the two then-independent companies achieved sales of €36.5 billion (ZF) and $3.4 billion (WABCO).

With the integration of WABCO, the leading global supplier of braking control systems and other advanced technologies that improve the safety, efficiency and connectivity of commercial vehicles ZF will create a new level of capability to pioneer the next generation of solutions and services for original equipment manufacturers and fleets globally. WABCO, with almost 12,000 people in 40 locations worldwide, will now operate under the ZF brand as its new Commercial Vehicle Control Systems division.

WABCO PRODUCTS IN NORTH AMERICA

ZF's Commercial Vehicle Control Systems division is located in Auburn Hills, Michigan.
The organization focuses on the sales of industry-leading WABCO safety, efficiency, and connectivity technologies such as:

- Foundation Brakes: Air Disc Brakes, Hydraulic Disc Brakes, Drum Brakes, Brake Chambers
- Advanced Driver Assistance Systems: OnGuard®, OnGuardACTIVE®, OnLane®, OnLaneALERT®, OnSide®
- Aerodynamic Solutions: OptiFlow® TrailerSkirts™, OptiFlow® AutoTail™
- Air Charging and Processing: Compressors, Air Dryers
- Braking and Stability Control Systems: Truck and Trailer ABS
- Electronic Suspension Control: ECAS
- Tire Pressure Monitoring: OptiTire™

Regional offices and an expansive network of field sales and service professionals are located throughout North America.

For more information call the WABCO Customer Care Center at (855) 228-3203 or visit:

- WABCO Global: www.wabco-auto.com
- WABCO North America: www.wabco-na.com
- WABCO Customer Center: www.wabco-customercenter.com
- MICO, Inc.: www.mico.com

ADVANCED SAFETY AND DRIVER EFFECTIVENESS

ZF's Commercial Vehicle Control Systems division leads the world in the creation and supply of advanced braking and control systems for trucks, buses and trailers. ZF's Commercial Vehicle Control Systems division delivers solutions that integrate sophisticated driver assistance technologies with braking, chassis and suspension systems.

Connected with customers and aligned with their own technology roadmaps, our engineering and manufacturing teams develop new products and functionalities that provide:

- Greater ability to control vehicles in critical driving situations
- Improved driver effectiveness and comfort
- Advanced safety systems that contribute to vehicle compliance with increasingly stringent safety and performance regulations

VEHICLE EFFICIENCY AND ENVIRONMENTAL SUSTAINABILITY

ZF's Commercial Vehicle Control Systems division is at the forefront of our industry's drive to protect the environment and develop greener transportation solutions. Our vision of significant improvements in vehicle efficiency and environmental sustainability is based on focus in three key areas:

- Improve weight performance ratios of our products by using lighter materials and enhancing the performance of existing products
- Increase fuel savings by reducing power consumption of braking system and related products
- Develop energy recovery systems that reuse energy instead of wasting it

CONTACT INFORMATION

If you have questions on which part(s) to purchase or any technical questions or issues	Contact the WABCO Customer Care Center at 855-228-3203 or wnacustomercare@wabco-auto.com
If you have questions related to the purchase or installation of TOOLBOX PLUS™	Contact the Snap-On Customer Call Center at 800-639-6774
For more information about MICO products	www.mico.com
For retrofit training prior to placing an order	Contact your WABCO Sales Representative
For core eligibility and/or to return cores	Visit WABCO's RemanCoreConnect website at remancoreconnect.com
To request access to the core return system or for any support needs	Email core.return.NA@wabco-auto.com

Note: User shall check OE Vehicle Guidelines (Driver's Tips) before installing parts.

Edition 2
Version 1 (07.2020)
PB19028 (en)

This publication is not subject to any update service. Information contained in this publication was in effect at the time the publication was approved for printing and is subject to change without notice or liability. WABCO reserves the right to revise the information presented or to discontinue the production of parts described at any time.

TABLE OF CONTENTS

TITLE **PAGE**

TRAILER 1-2
TRACTOR 1-12
SENSOR QUICK REFERENCE GUIDE 1-29
SENSORS 1-30

TRAILER

2S/1M EASY-STOP RETROFIT KIT

	Part No.	New/ Service Exchange	Contains ECU/Valve	Application
	400 612 012 0	New	400 500 104 0	Dollies, steerable axles, turntables Contains an Enhanced Easy-Stop ECU/Valve and a power cable adapter for use with the existing Easy-Stop power cable.
	400 612 000 0	New	400 500 101 0	Standard trailers Do not use with turntables, steerables, or dollies. Contains an Enhanced Easy-Stop ECU/Valve and a power cable adapter for use with the existing Easy-Stop power cable.
	400 612 001 0	New	400 500 101 0	Standard trailers Contains an Enhanced Easy-Stop ECU/Valve and a power cable adapter for use with the existing Easy-Stop power cable.

4S/2M, 4S/3M EASY-STOP RETROFIT KIT

	Part No.	New/ Service Exchange	Contains ECU/Valve	Application
	400 612 010 0	New	400 500 103 0	Contains an Enhanced Easy-Stop ECU/Valve and a power cable adapter for use with the existing Easy-Stop power cable.
	400 612 011 0	New	400 500 103 0	Contains an Enhanced Easy-Stop ECU/Valve and a power cable adapter for use with the existing Easy-Stop power cable.
	400 612 003 0	New	400 500 103 0	Contains an Enhanced Easy-Stop ECU/Valve and a power cable adapter for use with the existing Easy-Stop power cable.

2S/1M RETROFIT KIT BENDIX, HALDEX, WABASH RETROFIT KIT

	Kit No.	New/ Service Exchange	Contains ECU/Valve	Application
	400 612 016 0	New	400 500 101 0	ECU/Valve Assembly, 14 foot Power Cable, Sensors with 18 in. Leads, 6 foot Sensor Extension Cables and Sensor Clips. If for Wabash, only applies to MBS1 or MBS1P.

TRAILER

2S/1M OR 4S/1M RETROFIT KIT — WABASH MBS2

	Part No.	New/Service Exchange	Contains ECU/Valve	Application
	400 612 021 0	New	400 500 101 0	ECU/Valve Assembly, 14 foot Power Cable, Sensors, 6 foot Sensor Extension Cables, Sensor Clips with 18 in. Leads, Axle Plug (Tapped Axle), Press Plugs, Sensor Mounting Blocks, Sealant and Retrofit Instructions
	400 612 022 0	New	N/A	ABS Ring, Press Plugs, Sensor Mounting Blocks, Sealant and Retrofit Instructions

2S/1M ECU WITH VALVE

	Part No.	New/Service Exchange	ECU Only	Modulator Valve	Bracket	Application
	400 500 101 0	New	446 108 201 0	472 195 033 0	478 407 058 4	Used on trailers produced after March 1, 2001. Complete Enhanced Easy-Stop Assembly consists of an ECU, single or dual modulator valve and, for the Basic, a bracket. Replacement parts include ECU or modulator valve, mounting screws, O-ring, grease, and installation instructions.
	400 500 101 7	Service Exchange				
	400 500 104 0	New	446 108 204 0	472 195 033 0	478 407 058 4	Recommended for use with turntables, steerables and dollies Used on trailers produced after March 1, 2001. Complete Enhanced Easy-Stop Assembly consists of an ECU, single or dual modulator valve and, for the Basic, a bracket. Replacement parts include ECU or modulator valve, mounting screws, O-ring, grease, and installation instructions.
	400 500 104 7	Service Exchange				

TRAILER

ECU WITH VALVE

	Part No.	New/Service Exchange	ECU Only	Modulator Valve	Bracket	Application
	400 500 102 0	New	400 850 600 0	400 850 602 0	N/A	Used on trailers produced after March 1, 2001. Complete Enhanced Easy-Stop Assembly consists of an ECU, single or dual modulator valve and, for the Basic, a bracket. Replacement parts include ECU or modulator valve, mounting screws, O-ring, grease, and installation instructions.
	400 500 102 7	Service Exchange				
	400 500 103 0	New	400 850 601 0	400 850 602 0	N/A	Used on trailers produced after March 1, 2001. Complete Enhanced Easy-Stop Assembly consists of an ECU, single or dual modulator valve and, for the Basic, a bracket. Replacement parts include ECU or modulator valve, mounting screws, O-ring, grease, and installation instructions.
	400 500 103 7	Service Exchange				

2S/2M, 4S/2M, 4S/3M WITH INFOLINK ECU WITH VALVE

	Part No.	New/Service Exchange	ECU Only	Modulator Valve	Bracket	Application
	400 500 105 0	New	N/A	400 850 602 0	478 407 058 4	Used on trailers produced after March 1, 2001. Complete Enhanced Easy-Stop Assembly consists of an ECU, single or dual modulator valve and, for the Basic, a bracket. Replacement parts include ECU or modulator valve, mounting screws, O-ring, grease, and installation instructions.
	400 500 106 0	New	N/A	472 195 033 0	478 407 058 4	Used on trailers produced after March 1, 2001. Complete Enhanced Easy-Stop Assembly consists of an ECU, single or dual modulator valve and, for the Basic, a bracket. Replacement parts include ECU or modulator valve, mounting screws, O-ring, grease, and installation instructions.

TRAILER

ECU WITHOUT VALVE

	Part No.	New/Service Exchange	Type	Application
	400 850 600 0	New	2S/2M	Used on trailers produced after March 1, 2001. Includes ECU, mounting screws, O-ring, grease, and installation instructions.
	446 108 201 7	Service Exchange		
	400 850 601 0	New	2S/2M, 4S/2M or 4S/3M Premium	Used on trailers produced after March 1, 2001. Includes ECU, mounting screws, O-ring, grease, and installation instructions.
	446 108 201 0	New	2S/1M	Used on standard trailers produced after March 1, 2001. Includes ECU, mounting screws, O-ring, grease, and installation instructions.
	446 108 201 7	Service Exchange		
	446 108 204 0	New	2S/1M	Used on trailers produced after March 1, 2001. Includes ECU, mounting screws, O-ring, grease, and installation instructions. Recommended for use with turntables, steerables and dollies.
	446 108 201 7	Service Exchange		

MODULATOR VALVE

	Part No.	New/Service Exchange	Application
	400 850 602 0	New	Used on trailers produced after March 1, 2001. For 2M Enhanced Easy-Stop Supply (Port 1) - 3/4 in.-14 Dryseal NPTF

	Part No.	New/Service Exchange	Port	Operating Pressure PSI	Application
	472 195 033 0	New	Exhaust (Port 3) - No thread	145 (10)	For use on trailers produced April 1, 1999 or later. For 3M Enhanced Easy-Stop or 2M/3M Easy-Stop units Use with bayonet style cable connectors. 12 volt, 3-4 psi crack pressure, 2 supply ports, 4 delivery ports
	400 612 009 0	New	3/4 in.-14 Dryseal NPTF	145 (10)	For use on trailers produced prior to April 1, 1999. For 3M Enhanced Easy-Stop or 2M/3M Easy-Stop Units.

TRAILER

VALVE LIFT AXLE TRAILER ABS

Part No.	Application
463 084 050 0	Trailer ABS lift axle valve used in kit 400 850 821 0

LIFT AXLE KIT

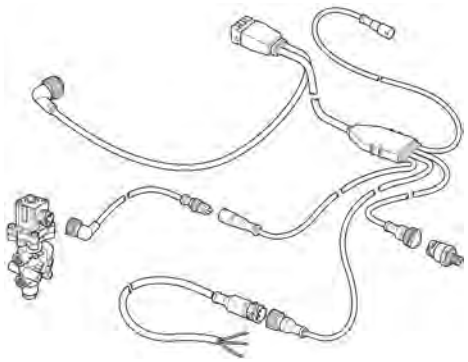

Part No.	Application
400 850 821 0	Contains lift axle control valve, 3 meter solenoid valve cable, multiple generic I/O cables, 12 volt analog input cable, and pressure sensor.
400 850 845 0	Lift Axle kit for RSS+ with lamp auto override

VALVE LIFT AXLE RSS PLUS

	Part No.	Application
IMAGE NOT AVAILABLE AT TIME OF PRINTING	400 850 841 0	RSS Plus 2M Automatic Lift Axle kit. Kit includes lift axle valve
IMAGE NOT AVAILABLE AT TIME OF PRINTING	400 853 004 2	RSSIM Plus 1M Lift Axle kit.

TRAILER

RSS PLUS RETROFIT KIT 4S/2M			
	Kit No.	**Valve Only**	**Application**
	400 612 023 0	480 107 000 0	Air Ride Suspension with Non-ABS or Other Non-WABCO Equipped Trailer ABS ECU/Valve Assembly, 3 ft. Power Cable, Sensors with 1.5 ft. Leads, 6 ft. Sensor Extension Cables, In-Line Filter, Sensor Clips, Sensor Blocks, Tone Rings, Identification Labels and Installation Instructions.
	400 612 005 0	480 107 000 0	Air Ride Suspension with WABCO ABS Equipped Trailer with 4S/2M ECU/Valve Assembly, 3 ft. Power Cable, 6 ft. Sensor Extension Cables, In-Line Filter, Identification Labels and Installation Instructions.
	400 612 024 0	480 107 000 0	Spring Ride Suspension with WABCO ABS Equipped Trailer with 4S/2M ECU/ Valve Assembly, 3 ft. Power Cable, 6 ft. Sensor Extension Cables, In-Line Filter, Distance Sensor Cable, Distance Sensor Bracket, Identification Labels and Installation Instructions
	400 612 008 0	480 107 000 0	ECU/Valve Assembly, 15 ft. Power Cable, 3 ft. Sensor Extension Cables, In-Line Filter, In-Line Filter, Distance Sensor, Distance Sensor Cable, Identification Labels and Installation Instructions
	400 612 007 0	480 107 000 0	Air Ride Suspension with WABCO ABS Equipped Trailer with 4S/2M ECU/Valve Assembly, 15 ft. Power Cable, 10 ft. Sensor Extension Cables, In-Line Filter, Identification Labels and Installation Instructions.

TRAILER

RSS VALVE ASSEMBLY 1M

Part No.	New/Service Exchange	Volt	Application
480 110 001 0	New	12	Requires TOOLBOX PLUS™ to complete “End of Line Test”

RSS VALVE ASSEMBLY 2M

Part No.	New/Service Exchange	Volt	Application
480 107 000 0	New	12	EBS installation kit not required. Requires TOOLBOX PLUS™ to complete “End of Line Test”

RSS+ EXTENSIONS

Part No.	Application
441 050 100 0	Distance sensor used for mechanical coil spring applications.

LINKAGE ASSEMBLY

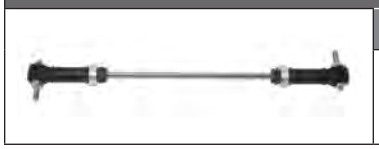

Part No.	Application
441 050 712 2	Distance sensor linkage used for mechanical coil spring applications.

TRAILER

CABLES

	Part No.	Feet	Meters	Application
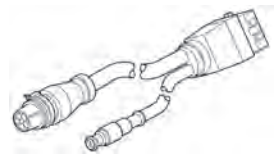	449 324 005 0	1.65	.50	Input/Output for use with Enhanced Easy-Stop.
	449 324 047 0	15	4.7	Input/Output for use with Enhanced Easy-Stop.
	449 326 005 0	1.65	.50	4-conductor power cable. Available with industry standard harness connector and Enhanced Easy-Stop connector.
	449 326 010 0	3	1	4-conductor power cable. Available with industry standard harness connector and Enhanced Easy-Stop connector.
	449 326 030 0	10	3	4-conductor power cable. Available with industry standard harness connector and Enhanced Easy-Stop connector.
	449 326 047 0	14	4.7	4-conductor power cable. Available with industry standard harness connector and Enhanced Easy-Stop connector.
	449 326 060 0	20	6	4-conductor power cable. Available with industry standard harness connector and Enhanced Easy-Stop connector.
	449 328 030 0	10	3	4-conductor power cable. Blunt cut. Enhanced Easy-Stop connector on one end and 4 individual wires on the other end.
	449 328 110 0	36	11	4-conductor power cable. Blunt cut. Enhanced Easy-Stop connector on one end and 4 individual wires on the other end.
	449 351 010 0	3	1	Use with RSS Plus.
	449 351 047 0	15.4	4.7	Use with RSS Plus.
	449 364 142 0	3 10	.50 1.65	4-conductor power cable. Y-style. Enhanced Easy-Stop connector. Used with diagnostic connector on the trailer.
	449 364 143 0	3 10	1 3	4-conductor power cable. Y-style. Enhanced Easy-Stop connector. Used with diagnostic connector on the trailer.
	449 364 150 0	10 13	3 4	4-conductor power cable. Y-style. Enhanced Easy-Stop connector. Used with diagnostic connector on the trailer.
	449 364 153 0	10 20	3 6	4-conductor power cable. Y-style. Enhanced Easy-Stop connector. Used with diagnostic connector on the trailer.
	449 441 030 0	10	3	Used with Premium Enhanced Easy-Stop ECU/Modulator Valve Assembly in 3M installations. Straight connector.
	449 441 060 0	20	6	Used with Premium Enhanced Easy-Stop ECU/Modulator Valve Assembly in 3M installations. Straight connector.
	449 441 080 0	26	8	Used with Premium Enhanced Easy-Stop ECU/Modulator Valve Assembly in 3M installations. Straight connector.
	449 441 110 0	36	11	Used with Premium Enhanced Easy-Stop ECU/Modulator Valve Assembly in 3M installations. Straight connector.
	449 442 010 0	3	1	Optional generic Input/Output cable for use with 2S/2M or 4S/2M Premium ECU/Dual Modulator Valve Assemblies. Enhanced Easy-Stop

TRAILER

CABLES

	Part No.	Feet	Meters	Application
	449 518 030 0	10	3	With Socket
	449 639 030 0	10	3	Use with RSS Plus (TOOLBOX PLUS™ 8.12 or higher) and connecting hardware to PC are the same as WABCO Easy-Stop or Enhanced Easy-Stop Trailer ABS.
	449 811 020 0	6.5	2	Use with RSS Plus. Distance sensor cable 6.5 ft. (2m) used for mechanical coil spring suspension applications.
	449 811 030 0	10	3	RSS Plus.
	894 604 944 0	3	1	4-conductor pigtail power cable for Easy-Stop. Sold with industry standard harness connector.
	894 606 038 0	14	4.7	4-conductor pigtail power cable. Sold with industry standard harness connector.
	894 606 050 0	20	6	4-conductor pigtail power cable. Sold with industry standard harness connector.
	894 606 275 2	1.65	.50	Used with Enhanced Easy-Stop 2S/1M Basic ECU/Modulator Valve Assembly - connects the relay valve to the ECU. Right angle connector.
	894 606 295 2	2.13	.65	Enhanced Easy Stop Extension Modulator Valve Cable
	894 607 312 0	1	.30	Adaptor Cable Connects Easy-Stop power cable to an Enhanced Easy-Stop ECU/modulator valve assembly.
	894 607 313 0	10	3	Adaptor Cable Connects Easy-Stop power cable to an Enhanced Easy-Stop ECU/modulator valve assembly.

TRAILER

IN-LINE FILTERS

	Part No.	Application
	432 500 005 0	In-line filter (complete valve). Mounted at the Gladhand. Highly recommended for control line. Prevents contamination of the trailer's air system. Requires regular cleaning, but equipped with a bypass if needed.
	400 611 019 0	Requires regular cleaning, but equipped with a bypass if needed. For 432 500 005 0 only.
	897 080 360 4	O-ring

TOOLS

	Part No.	Application
	100 100 002 4	In-line filter tool (to clean and replace cartridge). For 432 500 005 0 only.
	2237 Z 1222	A sealed switch and lamp that connects to the SAE J1587 diagnostic connector. This tool is used to activate the Easy-Stop and Enhanced Easy-Stop blink code diagnostics, configure the ECU, and test the installation. The tool is designed to remain on the trailer at all times.

BRACKETS

	Part No.	Application
	478 407 058 4	For Enhanced Easy-Stop 2S/1M ECU/Valve assemblies only.

TRACTOR PROGRAMMABLE ECUS

Most WABCO tractor ABS ECUs are “programmable” enabling you to stock a small number of base units to service a large number of part numbers.

Programming requires:

- Access to the vehicle if programming on the vehicle or WABCO’s Bench Programming Unit 400 850 960 0 if the vehicle is not readily available
- WABCO TOOLBOX PLUS™ (See Diagnostic Software section of this catalog for more information on the features of TOOLBOX PLUS™)
- J1939 diagnostics adapter cable – available for purchase through your preferred parts distributor
- Purchase of the appropriate programmable ECU base unit
- An account with Snap-On® Business Solutions at https://wabco.snapon.com. For assistance setting up an account please contact the Snap-On Customer Call Center at 800-639-6774
- Information required to download the configuration file from https://wabco.snapon.com. For assistance with configuration file download please contact the Snap-On Customer Call Center at 800-639-6774
  - Complete 17 digit VIN of vehicle
  - Part number of ECU being replaced (original ECU installed on the vehicle)
  - New programmable ECU part number

WHO TO CALL	
If you have part number questions such as which base unit to purchase or what the appropriate configuration file is, or require a copy of the instructions in the box OR If you have technical questions or issues such as: • Cannot get the configuration file to download to computer • Cannot get the configuration file to upload onto ECU • Continue to receive a “FAIL” when programming the configuration file to the ECU	Contact the WABCO Customer Care Center at 855-228-3203 or wnacustomercare@wabco-auto.com
If you have questions with the Snap-on website or creating an account OR If you have questions about purchasing TOOLBOX PLUS™	Contact the Snap-On Customer Call Center at 800-639-6774

TRACTOR

PROGRAMMABLE ECU

	Part No.	Volt	Application
IMAGE NOT AVAILABLE AT TIME OF PRINTING	400 864 801 0	12	4S4M ATC, PLC, 500K
	400 864 802 0	12	4S4M Hill Start Aid, ATC, PLC, 500K
	400 864 803 0	12	6S ATC, PLC, 500K
	400 864 804 0	12	6S Hill Start Aid, ATC,PLC, 500K
	400 867 101 0	12	4S4M ESC, ATC, PLC, 500K
	400 867 102 0	12	4S4M Hill Start Aid, ESC, ATC, PLC, 500K
	400 867 103 0	12	6S ESC, ATC, PLC, 500K
	400 867 104 0	12	6S Hill Start Aid, ESC, ATC, PLC, 500K
	400 867 113 0	12	4S4M ESC, ATC, PLC
	400 867 114 0	12	4S4M Hill Start Aid, ESC, ATC, PLC
	400 867 115 0	12	6S ESC, ATC, PLC
	400 867 116 0	12	6S Hill Start Aid, ESC, ATC, PLC
	400 864 815 0	12	Next Gen 4S4M ATC, PLC
	400 864 816 0	12	Next Gen 4S4M Hill Start Aid, ATC, PLC
	400 864 817 0	12	Next Gen 6S6M, ATC, PLC
	400 864 818 0	12	Next Gen 6S6M, Hill Start Aid, ATC, PLC
	400 867 119 0	12	Next Gen 4S4M ESC,ATC, PLC
	400 867 120 0	12	Next Gen 4S4M ESC, Hill Start Aid, ATC, PLC
	400 867 121 0	12	Next Gen 6S6M ESC, ATC, PLC
	400 867 122 0	12	Next Gen 6S6M ESC, Hill Start Aid, ATC, PLC

mBSP ECU part numbers can change often with latest software update. For the latest ECU part numbers and supercessions, please contact WABCO Customer Care Center at 855-228-3203 or wnacustomercare@wabco-auto.com

TRACTOR

PROGRAMMABLE ECU CAB MOUNTED 4S/4M*

Part No.	Volt	Application
400 864 009 0	12	Power Line Carrier with Automatic Traction Control Option
400 864 011 0	12	Basic
400 864 361 0	12	Power Line Carrier
400 865 013 0	12	External Braking Request, Automatic Traction Control, Power Line Carrier
400 865 015 0	12	Hill Start Aid, External Braking Request, Electronic Stability Control, Automatic Traction Control, Power Line Carrier
400 865 043 0	12	External Braking Request, Roll Stability Control, Automatic Traction Control, Power Line Carrier
400 865 052 0	12	External Braking Request, Roll Stability Control, Automatic Traction Control,Power Line Carrier
400 866 164 0	12	External Braking Request, Electronic Stability Control, Automatic Traction Control, Power Line Carrier
400 866 167 0	12	Hill Start Aid, External Braking Request, Electronic Stability Control, Automatic Traction Control, Power Line Carrier

PROGRAMMABLE ECU CAB MOUNTED 6S/6M*

Part No.	Volt	Application
400 864 005 0	12	Hill Start Aid, Automatic Traction Control, Power Line Carrier
400 864 007 0	12	Power Line Carrier with Automatic Traction Control Option
400 864 008 0	12	Power Line Carrier with Automatic Traction Control Option
400 865 014 0	12	External Braking Request, Roll Stability Control, Automatic Traction Control, Power Line Carrier
400 865 044 0	12	External Braking Request, Roll Stability Control, Automatic Traction Control, Power Line Carrier
400 865 045 0	12	External Braking Request, Roll Stability Control, Automatic Traction Control, Power Line Carrier
400 865 047 0	12	Hill Start Aid, External Braking Request, Electronic Stability Control, Automatic Traction Control, Power Line Carrier
400 865 048 0	12	Hill Start Aid, External Braking Request, Electronic Stability Control, Automatic Traction Control, Power Line Carrier
400 866 165 0	12	Electronic Stability Control, Automatic Traction Control, Power Line Carrier
400 866 166 0	12	External Braking Request, Roll Stability Control, Automatic Traction Control, Power Line Carrier
400 866 168 0	12	Hill Start Aid, External Braking Request, Electronic Stability Control, Automatic Traction Control, Power Line Carrier
400 866 169 0	12	Hill Start Aid, External Braking Request, Electronic Stability Control, Automatic Traction Control, Power Line Carrier

TRACTOR

PROGRAMMABLE ECU FRAME MOUNTED 4S/4M*

Part No.	Volt	Application
400 860 000 0	12	Power Line Carrier with Automatic Traction Control Option
400 860 004 0	12	Automatic Traction Control, Power Line Carrier
400 868 007 0	12	External Braking Request, Roll Stability Control, Automatic Traction Control, Power Line Carrier
400 860 003 0	12	Power Line Carrier with Automatic Traction Control Option
400 868 009 0	12	External Braking Request, Roll Stability Control, Automatic Traction Control, Power Line Carrier

PROGRAMMED ECU CAB MOUNTED 6S/6M

Part No.	Hardware	Tire Size Rpm	Volt	Wheel Base
400 866 308 0	Universal	488-519	12	240-264

PROGRAMMED ECU FRAME MOUNTED 4S/4M

Part No.	Hardware	Tire Size Rpm	Volt	Wheel Base
446 106 076 0	N/A	N/A	12	N/A
400 864 612 0	Universal	428-578	24	428-578
400 868 102 0	N/A	447-493	12	N/A

*See Tractor ABS ECU Cross Reference on Page 11-2.

TRACTOR

PROGRAMMED ECU FRAME MOUNTED 6S/4M

Part No.	Configuration	Version	Volt
446 106 071 0	6S/4M	D	12

ECU BENCH PROGRAMMER UNIT

Part No.
400 850 960 0 See page 1-12 for instructions on purchasing TOOLBOX PLUS™ diagnostic software.

TRACTOR

TRACTOR ABS VALVE PACKAGE (REAR AXLE)

ABS Valve Pkg. Part No.	Crack Pressure & Voltage	ABS System Configuration	Valves To Be Replaced	Replacement Kit Part No.
472 500 120 0	4.0 psi 12 volt	4S/4M Bayonet-Style connector	Entire Valve Package 472 195 076 0 ABS modulator valve 472 195 077 0 ABS modulator valve	472 500 120 0 400 611 000 0 400 611 001 0 400 611 033 0 400 611 038 0
472 500 121 0	5.5 psi 12 volt	4S/4M Bayonet-Style connector	Entire Valve Package 472 195 076 0 ABS modulator valve 472 195 077 0 ABS modulator valve	472 500 121 0 400 611 000 0 400 611 001 0 400 611 034 0 400 611 039 0
472 500 122 0	4.0 psi 12 volt	4S/4M 6S/4M Bayonet-Style connector	Entire Valve Package 472 195 078 0 ABS modulator valve 472 195 079 0 ABS modulator valve	472 500 122 0 400 611 002 0 400 611 003 0 400 611 033 0
472 500 123 0	5.5 psi 12 volt	4S/4M 6S/4M Bayonet-Style connector	Entire Valve Package 472 195 078 0 ABS modulator valve 472 195 079 0 ABS modulator valve	472 500 123 0 400 611 002 0 400 611 003 0 400 611 034 0
472 500 124 0	4.0 psi 12 volt	6S/4M plus 1M 6S/6M Bayonet-Style connector	Entire Valve Package 472 195 076 0 ABS modulator valve 472 195 077 0 ABS modulator valve 973 011 023 0 Relay valve	472 500 124 0 400 611 000 0 400 611 001 0 400 611 033 0
472 500 125 0	5.5 psi 12 volt	6S/6M Bayonet-Style connector	Entire Valve Package 472 195 076 0 ABS modulator valve 472 195 077 0 ABS modulator valve 973 011 024 0 Relay valve	472 500 125 0 400 611 000 0 400 611 001 0 400 611 034 0
472 500 132 0	4.0 psi 24 volt	4S/4M 6S/4M Bayonet-Style connector	Entire Valve Package 472 195 074 0 ABS modulator valve 472 195 075 0 ABS modulator valve Relay valve	472 500 132 0 400 611 033 0

*Provides an alternative to separate valve installation by combining a service brake relay valve with two ABS modulator valves.
Compatible with C-, D- and E-Version ECUs. Replacement kits contain replacement valve, bolts, O-rings and lubricant.
Note: Relay Valve and Modulator Valves can be serviced separately.

TRACTOR

TRACTOR ABS VALVE PACKAGE (REAR AXLE)

ABS Valve Pkg. Part No.	Crack Pressure & Voltage	ABS System Configuration	Valves To Be Replaced	Replacement Kit Part No.
472 500 420 0	4.0 psi 12 volt	4S/4M Bayonet-Style connector rear ports	Entire Valve Package 472 195 076 0 ABS modulator valve 472 195 077 0 ABS modulator valve	472 500 420 0 400 611 000 0 400 611 001 0 400 611 033 0
472 500 421 0	5.5 psi 12 volt	4S/4M Bayonet-Style connector rear ports	Entire Valve Package 472 195 076 0 ABS modulator valve 472 195 077 0 ABS modulator valve	472 500 421 0 400 611 000 0 400 611 001 0 400 611 034 0
472 500 422 0	4.0 psi 12 volt	4S/4M 6S/4M Bayonet-Style connector rear ports	Entire Valve Package 472 195 078 0 ABS modulator valve 472 195 079 0 ABS modulator valve	472 500 422 0 400 611 002 0 400 611 003 0 400 611 033 0
472 500 423 0	5.5 psi 12 volt	4S/4M 6S/4M Bayonet-Style connector rear ports	Entire Valve Package 472 195 078 0 ABS modulator valve 472 195 079 0 ABS modulator valve	472 500 423 0 400 611 002 0 400 611 003 0 400 611 034 0
472 500 424 0	4.0 psi 12 volt	6S/4M plus 1M 6S/6M Bayonet-Style connector rear ports	Entire Valve Package 472 195 076 0 ABS modulator valve 472 195 077 0 ABS modulator valve 973 011 023 0 Relay valve	472 500 424 0 400 611 000 0 400 611 001 0 400 611 033 0
472 500 425 0	5.5 psi 12 volt	6S/6M Bayonet-Style connector rear ports	Entire Valve Package 472 195 078 0 ABS modulator valve 472 195 079 0 ABS modulator valve 973 011 024 0 Relay valve	472 500 425 0 400 611 002 0 400 611 003 0 400 611 034 0

*Provides an alternative to separate valve installation by combining a service brake relay valve with two ABS modulator valves.
Compatible with C-, D- and E-Version ECUs. Replacement kits contain replacement valve, bolts, O-rings and lubricant.
Note: Relay Valve and Modulator Valves can be serviced separately.

TRACTOR

TRACTOR ABS/ATC VALVE PACKAGE (REAR AXLE)

ABS/ATC Valve Pkg. Part No.	Crack Pressure & Voltage	ABS System Configuration	Valves To Be Replaced	Replacement Kit Part No.
472 500 220 0	4.0 psi 12 volt	4S/4M Bayonet-Style connector	Entire Valve Package 472 195 076 0 ABS modulator valve 472 195 077 0 ABS modulator valve 973 011 025 0 Relay valve 472 170 797 0 ATC valve	472 500 220 0 400 611 000 0 400 611 001 0 400 611 032 0 472 170 797 0
472 500 221 0	5.5 psi 12 volt	4S/4M Bayonet-Style connector	Entire Valve Package 472 195 076 0 ABS modulator valve 472 195 077 0 ABS modulator valve 973 011 025 0 Relay valve 472 170 797 0 ATC valve	472 500 221 0 400 611 000 0 400 611 001 0 400 611 036 0 472 170 797 0
472 500 222 0	4.0 psi 12 volt	4S/4M 6S/4M Bayonet-Style connector	Entire Valve Package 472 195 078 0 ABS modulator valve 472 195 079 0 ABS modulator valve 973 011 025 0 Relay valve 472 170 797 0 ATC valve	472 500 222 0 400 611 002 0 400 611 003 0 400 611 032 0 472 170 797 0 400 611 008 0
472 500 223 0	5.5 psi 12 volt	4S/4M 6S/4M Bayonet-Style connector	Entire Valve Package 472 195 078 0 ABS modulator valve 472 195 079 0 ABS modulator valve 973 011 026 0 Relay valve 472 170 797 0 ATC valve	472 500 223 0 400 611 002 0 400 611 003 0 400 611 036 0 472 170 797 0
472 500 224 0	4.0 psi 12 volt	6S/4M plus 1M 6S/6M Bayonet-Style connector	Entire Valve Package 472 195 076 0 ABS modulator valve 472 195 077 0 ABS modulator valve 973 011 027 0 Relay valve 472 170 797 0 ATC valve	472 500 224 0 400 611 000 0 400 611 001 0 400 611 032 0 472 170 797 0
472 500 225 0	5.5 psi 12 volt	6S/4M plus 1M 6S/6M Bayonet-Style connector	Entire Valve Package 472 195 076 0 ABS modulator valve 472 195 077 0 ABS modulator valve 973 011 028 0 Relay valve 472 170 797 0 ATC valve	472 500 225 0 400 611 000 0 400 611 001 0 400 611 036 0 472 170 797 0

*Provides an alternative to separate valve installation by combining a service brake relay valve with two ABS modulator valves and one ATC valve. For D- and E-Version ECUs only. Replacement kits contain replacement valve, bolts, O-rings and lubricant.
Note: Relay Valve, ATC Valve and Modulator Valves can be serviced separately.

TRACTOR

TRACTOR ABS/ATC VALVE PACKAGE (REAR AXLE)

ABS/ATC Valve Pkg. Part No.	Crack Pressure & Voltage	ABS System Configuration	Valves To Be Replaced	Replacement Kit Part No.
472 500 226 0	5.5 psi 12 volt	4S/4M 6S/4M Bayonet-Style connector	Entire Valve Package 472 195 078 0 ABS modulator valve 472 195 079 0 ABS modulator valve 973 011 028 0 Relay valve 472 170 797 0 ATC valve	472 500 226 0 400 611 002 0 400 611 003 0 400 611 036 0 472 170 797 0
472 500 232 0	4.0 psi 24 volt	4S/4M 6S/4M Bayonet-Style connector	Entire Valve Package 472 195 074 0 ABS modulator valve 472 195 075 0 ABS modulator valve 973 011 025 0 Relay valve 472 170 796 0 ATC valve	472 500 232 0 400 611 032 0 472 170 796 0
472 500 520 0	4.0 psi 12 volt	4S/4M Bayonet-Style connector rear ports	Entire Valve Package 472 195 076 0 ABS modulator valve 472 195 077 0 ABS modulator valve 973 011 025 0 Relay valve 472 170 797 0 ATC valve	472 500 520 0 400 611 000 0 400 611 001 0 400 611 032 0 472 170 797 0
472 500 522 0	4.0 psi 12 volt	4S/4M 6S/4M Bayonet-Style connector rear ports	Entire Valve Package 472 195 078 0 ABS modulator valve 472 195 079 0 ABS modulator valve 973 011 025 0 Relay valve 472 170 797 0 ATC valve	472 500 522 0 400 611 002 0 400 611 003 0 400 611 032 0 472 170 797 0
472 500 523 0	5.5 psi 12 volt	4S/4M 6S/4M Bayonet-Style connector rear ports	Entire Valve Package 472 195 078 0 ABS modulator valve 472 195 079 0 ABS modulator valve 973 011 026 0 Relay valve 472 170 797 0 ATC valve	472 500 523 0 400 611 002 0 400 611 003 0 400 611 036 0 472 170 797 0
472 500 525 0	5.5 psi 12 volt	6S/4M Bayonet-Style connector rear ports	Entire Valve Package 472 195 078 0 ABS modulator valve 472 195 079 0 ABS modulator valve 973 011 028 0 Relay valve 472 170 797 0 ATC valve	472 500 525 0 400 611 002 0 400 611 003 0 400 611 036 0 472 170 797 0

*Provides an alternative to separate valve installation by combining a service brake relay valve with two ABS modulator valves and one ATC valve. For D- and E-Version ECUs only. Replacement kits contain replacement valve, bolts, O-rings and lubricant.
Note: Relay Valve, ATC Valve and Modulator Valves can be serviced separately.

TRACTOR

TRACTOR ABS VALVE PACKAGE (FRONT AXLE)

ABS Valve Pkg. Part No.	Crack Pressure & Voltage	ABS System Configuration	Valves To Be Replaced	Replacement Kit Part No.
472 500 320 0	1.0 psi 12 volt	Bayonet-Style connector	Entire Valve Package 472 195 076 0 ABS modulator valve 472 195 077 0 ABS modulator valve 973 500 104 0 Quick release valve	472 500 320 0 472 195 076 0 472 195 077 0 400 611 029 0 400 611 011 0
472 500 321 0	3.0 - 4.0 psi 12 volt	Bayonet-Style connector	Entire Valve Package 472 195 076 0 ABS modulator valve 472 195 077 0 ABS modulator valve 973 500 105 0 Quick release valve	472 500 321 0 472 195 076 0 472 195 077 0 400 611 030 0 400 611 012 0
472 500 322 0	6.0 - 8.0 psi 12 volt	Bayonet-Style connector	Entire Valve Package 472 195 076 0 ABS modulator valve 472 195 077 0 ABS modulator valve 973 500 106 0 Quick release valve	472 500 322 0 472 195 076 0 472 195 077 0 400 611 031 0

*Provides an alternative to separate valve installation by combining a quick release valve with two ABS modulator valves. This valve package is compatible with C-, D- and E- Version ECUs. Replacement kits contain replacement valve, bolts, O-rings and lubricant.
Note: Quick Release Valve and Modulator Valves can be serviced separately.

TRACTOR

QUICK RELEASE VALVE KIT

	Part No.	Application
	400 611 030 0	Replacement kits contain replacement valve, bolts, O-rings and lubricant. Replaces 973 500 105 0 Quick Release valve

MODULATOR VALVE

	Part No.	Application
	400 611 020 0	Replacement kit contains replacement valve, bolts, O-rings and lubricant. Replaces 472 195 080 0 Left ABS valve
	400 611 021 0	Replacement kit contains replacement valve, bolts, O-ring, lubricant and cables. Replaces 472 500 004 2
	400 611 000 0	Replacement kit contains replacement valve, bolts, O-rings and lubricant. Replaces 472 195 076 0
	400 611 001 0	Replacement kit contains replacement valve, bolts, O-rings and lubricant. Replaces 472 195 077 0
	400 611 002 0	Replacement kit contains replacement valve, bolts, O-rings and lubricant. Replaces 472 195 078 0 ABS Modulator valve

TRACTOR

MODULATOR VALVE

	Part No.	Application
	400 611 003 0	Replacement kit contains replacement valve, bolts, O-rings and lubricant. Replaces 472 195 079 0
	400 611 005 0	Contains 472 195 096 0 valve and adapter cable. Compatible with all versions of WABCO ECUs. Replaces 472 195 076 0

	Part No.	Application
	472 195 052 0	Not for use on the ABS valve package
	472 195 067 0	Push-to-Connect Weatherhead, Bayonet-Style connector Compatible with all versions of WABCO ECUs.

TRACTOR

MODULATOR VALVE

Part No.	Application
472 195 094 0	Bayonet-Style connector Compatible with all versions of WABCO ECUs.
472 195 094 7	
472 195 095 0	Bayonet-Style connector Compatible with all versions of WABCO ECUs.
472 195 095 7	
472 195 096 0	Bayonet-Style connector Compatible with all versions of WABCO ECUs.

Part No.	Port	Volt	Application
400 850 716 0	1/2 in. - 14 Dryseal NPTF	12	Contains relay valve 472 195 098 0

TRACTOR

VALVE PACKAGE

	Part No.	Crack Pressure	System	Volt	Application
	472 500 120 0	4.0 psi	4S/4M	12	Compatible with C-, D- and E-Version ECUs.
	472 500 121 0	5.5 psi	4S/4M	12	Compatible with C-, D- and E-Version ECUs.
	472 500 122 0	4.0 psi	4S/4M	12	Compatible with C-, D- and E-Version ECUs.
	472 500 123 0	5.5 psi	4S/4M	12	Compatible with C-, D- and E-Version ECUs.
	472 500 127 0	5.5 psi	4S/4M 6S/4M	12	Compatible with C-, D- and E-Version ECUs.
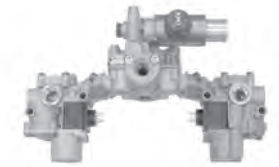	472 500 223 0	5.5 psi	6S/4M	12	Compatible with D- and E-Version ECUs.
	472 500 226 0	5.5 psi	6S/6M	12	Compatible with D- and E-Version ECUs.
	472 500 320 0	1.0 psi	4S/4M	12	Compatible with D- and E-Version ECUs.
	472 500 322 0	6.0 - 8.0 psi	4S/4M	12	Compatible with D- and E-Version ECUs.
	472 500 423 0	5.5 psi	6S/4M	12	Compatible with C-, D- and E-Version ECUs.

TRACTOR

mBSP SYSTEM

IMAGES NOT AVAILABLE AT TIME OF PRINTING

Part No.	Part Description	New/Service Exchange	Crack Pressure	System	Volt	Application
976 000 102 0	Relay Valve package	New	5.5 psi	4S4M	12	5-ports, no ATC. To be used with mBSP ECU
976 000 103 0	Relay Valve package	New	5.5 psi	4S4M	12	5-ports, with ATC. To be used with mBSP ECU
976 000 105 0	Relay Valve package	New	5.5 psi	4S4M / 6S6M	12	6-ports, with ATC. To be used with mBSP ECU
976 000 105 7	Relay Valve package	Service Exchange	5.5 psi	4S4M / 6S6M	12	6-ports, with ATC. To be used with mBSP ECU
976 000 106 0	Relay Valve package	New	5.5 psi	6S6M	12	7-ports, with ATC. To be used with mBSP ECU
976 000 107 0	Relay Valve package	New	5.5 psi	4S4M / 6S6M	12	7-ports, no ATC. To be used with mBSP ECU
976 000 107 7	Relay Valve package	Service Exchange	5.5 psi	4S4M / 6S6M	12	7-ports, no ATC. To be used with mBSP ECU
976 000 108 0	Relay Valve package	New	4 psi	4S4M	12	5-ports, no ATC. To be used with mBSP ECU
976 000 109 0	Relay Valve package	New	4 psi	4S4M	12	5-ports, with ATC. To be used with mBSP ECU
976 000 110 0	Relay Valve package	New	4 psi	4S4M / 6S6M	12	6-ports, with ATC. To be used with mBSP ECU
976 000 111 0	Relay Valve package	New	4 psi	6S6M	12	7-ports, with ATC. To be used with mBSP ECU
976 000 112 0	Relay Valve package	New	4 psi	4S4M / 6S6M	12	7-ports, no ATC. To be used with mBSP ECU
976 200 100 0	Front axle Valve package	New	3 psi	-	12	To be used with mBSP ECU and valve package
976 200 101 0	Front axle Valve package	New	6 psi	-	12	To be used with mBSP ECU and valve package
472 196 025 0	ABS solenoid modulator valve	New	n/a	-	12	To be used with mBSP ECU and valve package
961 899 211 0	Front brake valve pedal assembly	New	3 psi	-	12	To be used with mBSP ECU and valve package

TRACTOR

CABLES

	Part No.	Feet	Meters	Application
	449 413 060 0	19.69	6	3 pole bayonet connector cable with blunt cut end modulator valve cable
	449 415 150 0	49.21	15	2 pole bayonet connector cable with blunt cut end ATC valve cable
	449 511 020 0	6.56	2	3 pole brass nut style connector cable with blunt cut end
	449 532 009 0	2.95	.90	3 pole bayonet connector cable with blunt cut end modulator valve cable

ADAPTORS

	Part No.	Feet	Meters	Application
	894 601 132 2	.49	.15	3 pole adaptor cable straight Female bayonet style to straight M24 Male brass nut style modulator valve adaptor
	894 601 136 2	.49	.15	3 pole adaptor cable Female 90 degree bayonet style to straight M24 Male brass nut style modulator valve adaptor

ATC VALVE

	Part No.	Port	Volt	Application
	472 170 012 0	N/A	12	3/2 Solenoid
	472 170 997 0	1/4 in. - 18 NPTF Female - 2 pin	12	ATC or RSC valve. Bayonet-Style connector. Delivery port opposite solenoid connection. 3/2 Solenoid

TRACTOR

ATC VALVE KIT

	Part No.	Application
	400 611 007 0	Replacement kit contains entire valve package and adapter cables
	400 611 056 0	Replacement kit contains valve and adapter cable
	472 170 797 0	Replacement kit contains replacement valve, bolts, O-rings and lubricant. Replaces 472 170 797 0

SOLENOID VALVE

	Part No.	Volt	Application
	472 170 002 0	12	3/2 Solenoid

ABS RELAY VALVE KITS

	Part No.	Port	Volt	Application
	400 611 044 0	N/A	N/A	N/A

PRESSURE SENSOR

	Part No.	Port	Rating	Application
	441 044 106 0	1/4 in. NPTF	15 bar	Use with RSC, ESC, OnGuard and trailer RSSplus System.

SENSOR QUICK REFERENCE GUIDE

Part No.	Application
446 065 085 0	ESC Module
400 850 199 0	ESC Module
441 120 010 0	Steer Angle Sensor

SENSORS

SENSORS									
	Part No.	Replaces	Feet	Meters	Connector	Cable Type	Diameter	Wire Type	Sensor Type
	441 030 916 2	441 032 103 0	5.6	1.7	N/A	TRD	6.2mm	CS	90º
	441 030 907 2	441 032 808 0	1.31	0.4	N/A	TRD	6.2mm	CS	90º
	441 030 918 2	441 032 809 0	3.28	1	N/A	TRD	6.2mm	CS	90º
	441 030 909 2	441 032 813 0	5.8	1.8	N/A	TRD	6.2mm	CS	90º
	441 030 910 2	441 032 814 0	6.6	2	N/A	TRD	6.2mm	CS	90º
	441 030 900 2	441 032 124 0	6.56	2.00	KE-plug	TRD	6.2mm	CS	90º
	441 030 901 2	441 032 184 0	6.56	2.00	KE-plug	TRD	6.2mm	CCS	90º
	441 030 902 2	441 032 185 0	5.58	1.70	KE-plug	TRD	6.2mm	CCS	90º
	441 030 924 2	941 032 267 0	3.28	1	Yazaki	TRD	4.4mm	CS	90º

*When replacing the sensor, you must also replace the spring clip.

SENSORS

SENSORS									
	Part No.	Replaces	Feet	Meters	Connector	Cable Type	Diameter	Wire Type	Sensor Type
	441 030 905 2	441 032 381 0	6.76	2.06	KE-plug	TRD	6.2mm	CCS	Straight
	441 030 906 2	441 032 399 0	3.81	1.16	KE-plug	TRD	6.2mm	CCS	Straight
	441 035 941 2	441 035 001 0	1.31	0.4	KE-plug	TRD	4.4mm	CS	Straight
	441 030 904 2	441 032 334 0	3.28	1	KE-plug	TRD	4.4mm	CS	Straight
	441 030 917 2	441 032 919 0	5.6	1.7	N/A	TRD	6.2mm	CS	Straight
	441 030 919 2	441 032 444 0	5.8	1.8	N/A	TRD	6.2mm	CS	Straight
	441 030 908 2	441 032 900 0	5.8	1.8	N/A	TRD	6.2mm	CS	Straight
	441 030 920 2	441 032 971 0	6.6	2	N/A	TRD	6.2mm	CS	Straight
	441 030 923 2	441 032 142 0	4.69	1.43	N/A	TRD	4.4mm	CS	Straight

*When replacing the sensor, you must also replace the spring clip.

SENSORS

SENSOR EXTENSIONS

	Part No.	Feet	Meters	Application
	449 711 006 0	1.9	.6	2 pole wheel speed sensor cable with blunt cut end Tractor ABS cable
	449 711 015 0	4.9	1.5	2 pole wheel speed sensor cable with blunt cut end Tractor ABS cable
	449 713 008 0	2.75	.8	Two-wire cable with molded-on connector. Trailer ABS cable
	449 713 013 0	4.2	1.3	Two-wire cable with molded-on connector. Trailer ABS cable
	449 713 018 0	6	1.8	Two-wire cable with molded-on connector. Trailer ABS cable
	449 713 030 0	10	3.0	Two-wire cable with molded-on connector. Trailer ABS cable
	449 713 050 0	16	5.0	Two-wire cable with molded-on connector. Trailer ABS cable
	449 713 070 0	23	7.0	Two-wire cable with molded-on connector. Trailer ABS cable
	449 715 030 0	9.84	3	2 pole wheel speed sensor cable with flat contacts and strain relief grommet Tractor ABS cable

RSS PLUS EXTENSIONS

	Part No.	Feet	Meters	Application
	449 723 018 0	6	1.8	Use with RSS 2M only. Sensor extension cable with 90 degree connector at the ECU. Plugs into standard WABCO Service Part # ABS sensors.
	449 723 030 0	9	3	Use with RSS 2M only. Sensor extension cable with 90 degree connector at the ECU. Plugs into standard WABCO Service Part # ABS sensors.
	449 723 051 0	16	5.1	Use with RSS 2M only. Sensor extension cable with 90 degree connector at the ECU. Plugs into standard WABCO Service Part # ABS sensors.

SENSORS

SENSOR CLIPS

	Part No.	Replaces	Inside Diameter	Outside Diameter	Length	Application
	400 612 027 0	899 799 815 4	.63 in.	.71 in.	1.18 in.	Chrome nickel sensor clip.
	400 612 028 0	899 760 510 4	.63 in.	.71 in.	1.18 in.	Copper-beryllium sensor clip.

SENSOR BRACKETS

	441 902 352 4	1	Sensor Connector for meeting support

SENSOR BUSHINGS

	Part No.	Inside Diameter	Outside Diameter	Length	Application
	1225 S 1189	.71 in.	.87 in.	1.18 in.	Used on front steer axles only.

NOTES:

TABLE OF CONTENTS

TITLE **PAGE**

HPB QUICK REFERENCE 2-2
HPB 2-5
HABS-E 2-12
HABS 2-13
VALVES 2-14

HPB QUICK REFERENCE

HYDRAULIC COMPACT UNIT (HCU) COMPONENTS 10 COIL BUS APPLICATIONS			
	New	Service Exchange	Reman
HPB - 250K Baud WITH ATC & PB	not available	400 851 877 7	400 851 877 X
HPB - 250K Baud WITH ATC	not available	400 851 875 7	400 851 875 X
HPB - 500K Baud WITH ATC	not available	400 851 884 7	not available
HPB-500K Baud with ATC and Park Brake	400 851 886 0	400 851 886 7	not available
HPB ECU Kit Release 2 - 250K Baud	400 851 881 0	400 851 881 7	not available
HPB Reservoir Kit	451 900 922 2	not available	not available
Reservoir Rubber Grommet Kit	451 900 923 2	not available	not available
Accumulator Kit	458 501 924 2	not available	not available
Accumulator O-ring Kit	458 501 923 2	not available	not available
Pressure Supply Valve Kit	476 901 920 2	not available	not available
Pressure Supply Valve Coil Kit	442 879 920 2	not available	not available
Parking Brake Switch - 2nd Generation	446 280 001 0	not available	not available
Parking Brake Switch - 2nd Generation with Short Bracket	446 280 012 0	not available	not available
Parking Brake Switch - 2nd Generation with Long Bracket	not available	not available	not available
Parking Brake Switch - 3rd Generation	446 280 002 0	not available	not available
Parking Brake Switch - 3rd Generation with Short Bracket	446 280 013 0	not available	not available
Parking Brake Switch - 3rd Generation with Long Bracket	446 280 023 0	not available	not available
Parking Brake Knob	446 280 790 4	not available	not available
Relay Valve - ATC	478 407 929 2	not available	not available
Relay Valve - No ATC	478 407 937 2	not available	not available
Relay Valve Bleeder Screw Kit	478 407 921 2	not available	not available
HCU Hardware Mounting Kit	400 611 013 0	not available	not available
HCU Mounting Bracket - Front	478 901 052 2	not available	not available
HCU Mounting Bracket - Rear	478 901 053 2	not available	not available

HPB QUICK REFERENCE

HYDRAULIC COMPACT UNIT (HCU) COMPONENTS 8 COIL TRUCK APPLICATIONS			
	New	Service Exchange	Reman
HPB - 250K Baud WITH ATC & PB	not available	not available	not available
HPB - 250K Baud WITH ATC	not available	400 851 876 7	400 851 876 X
HPB - 500K Baud WITH ATC	not available	not available	not available
HPB - 500K Baud WITHOUT ATC	not available	400 851 885 7	not available
HPB ECU Kit Release 2 - 250K Baud	400 851 882 0	N/A	not available
HPB Reservoir Kit	451 900 922 2	not available	not available
Reservoir Rubber Grommet Kit	451 900 923 2	not available	not available
Accumulator Kit	458 501 924 2	not available	not available
Accumulator O-ring Kit	458 501 923 2	not available	not available
Pressure Supply Valve Kit	476 901 920 2	not available	not available
Pressure Supply Valve Coil Kit	442 879 920 2	not available	not available
Parking Brake Switch - 2nd Generation	446 280 001 0	not available	not available
Parking Brake Switch - 2nd Generation with Short Bracket	446 280 012 0	not available	not available
Parking Brake Switch - 2nd Generation with Long Bracket	not available	not available	not available
Parking Brake Switch - 3rd Generation	446 280 002 0	not available	not available
Parking Brake Switch - 3rd Generation with Short Bracket	446 280 013 0	not available	not available
Parking Brake Switch - 3rd Generation with Long Bracket	446 280 023 0	not available	not available
Parking Brake Knob	446 280 790 4	not available	not available
Relay Valve - ATC	478 407 929 2	not available	not available
Relay Valve - No ATC	478 407 937 2	not available	not available
Pump Replacement Kit	478 407 926 2	not available	not available
Relay Valve Bleeder Screw Kit	478 407 921 2	not available	not available
HCU Hardware Mounting Kit	400 611 013 0	not available	not available
HCU Mounting Bracket - Front	478 901 052 2	not available	not available
HCU Mounting Bracket - Rear	478 901 053 2	not available	not available

2

HPB QUICK REFERENCE

MASTER CYLINDER/RESERVOIR ASSEMBLY COMPONENTS 10 COIL BUS APPLICATIONS			
	New	Service Exchange	Reman
Master Cylinder/ Reservoir Assembly with Travel Switch	468 411 005 0	not available	not available
Reservoir with Fluid Level Switch	468 413 020 2	not available	not available
Reservoir Kit w/ Grommet Kit - No Cap	400 611 017 0	not available	not available
Master Cylinder Kit w/ Roll Pin	400 611 016 0	not available	not available
Reservoir Cap	451 900 474 2	not available	not available
Master Cylinder Bracket	478 901 054 0	not available	not available
Travel Switch Kit	400 850 844 0	not available	not available
Fluid Level Switch	468 413 921 2	not available	not available
Roll Pin Kit	400 611 045 0	not available	not available
Rubber Grommet Kit	451 900 924 2	not available	not available
Clevis Pin Kit	451 900 925 2	not available	not available

MASTER CYLINDER/RESERVOIR ASSEMBLY COMPONENTS 8 COIL TRUCK APPLICATIONS			
	New	Service Exchange	Reman
Master Cylinder/ Reservoir Assembly with Travel Switch	468 411 005 0	not available	not available
Reservoir with Fluid Level Switch	468 413 020 2	not available	not available
Reservoir Kit w/ Grommet Kit - No Cap	400 611 018 0	not available	not available
Master Cylinder Kit w/ Roll Pin	400 611 016 0	not available	not available
Reservoir Cap	451 900 474 2	not available	not available
Master Cylinder Bracket	478 901 057 2	not available	not available
Travel Switch Kit	400 850 844 0	not available	not available
Fluid Level Switch	468 413 921 2	not available	not available
Roll Pin Kit	400 611 045 0	not available	not available
Rubber Grommet Kit	451 900 924 2	not available	not available
Clevis Pin Kit	451 900 925 2	not available	not available

HPB

HCU REPLACEMENT KIT (WET) WITH ECU

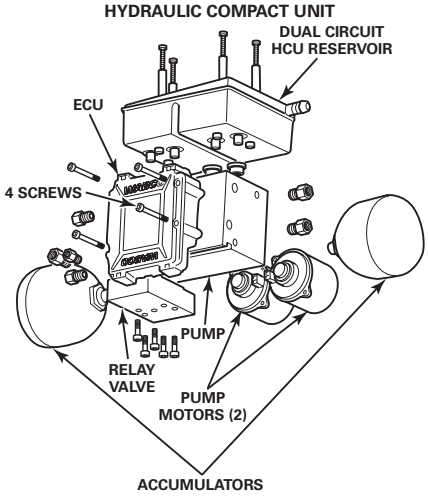

Part No.	Reman/Service Exchange	Coil	Application
400 851 875 7	Service Exchange	10	HCU replacement kit (wet), 12V, 250K Baud, 10 valves unit, w/ECU, RWD, w/ ATC, w/o brackets,w/reservoir (detached).
400 851 875 X	Reman		
400 851 875 7	Service Exchange	8	HCU replacement kit (wet), 12V, 250K Baud, 8 valves unit, w/ECU, w/o ATC, w/o brackets, w/reservoir (detached).
400 851 875 X	Reman		
400 851 877 7	Service Exchange	10	HCU replacement kit (wet), 12V, 250K Baud, 10 valves unit, w/ECU, RWD, w/ATC, w/Parking Brake, w/o brackets, w/reservoir (detached).
400 851 877 X	Reman		
400 851 877 7	Reman	10	RWD, w/ATC, w/PB plug, w/o brackets, w/reservoir (detached)
400 851 875 X	Service Exchange	10	HCU replacement kit (wet), 12V, 500K Baud, 10 valves unit, w/ECU, RWD, w/ ATC, w/o brackets, w/ reservoir (detached).
400 851 875 7	Service Exchange	8	HCU replacement kit (wet), 12V, 500K Baud, 8 valves unit, w/ECU, RWD, w/o ATC, w/o brackets, w/o Parking Brake, w/reservoir (detached).
400 851 877 X	Service Exchange	10	HCU replacement kit (wet), 12V, 500K Baud, 10 valves unit, w/ ECU, RWD, w/ATC, w/o brackets, w/Parking Brake, w/re servoir (detached).

2

HPB

ELECTRONIC CONTROL UNIT (ECU) REPLACEMENT KITS

Part No.	Type	Volt	Coil
400 851 881 0	New	12	10
400 851 881 7	Service Exchange	12	10
400 851 882 0	New	12	8

HCU RESERVOIR

	Part No.	Application
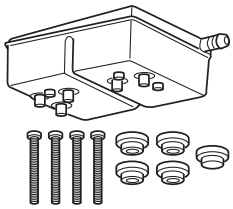	451 900 922 2	Kit contains HCU reservoir, four screws, reservoir plug and four rubber grommets. For 8 coil and 10 coil application.
	451 900 923 2	Kit contains four rubber grommets. For 8 coil and 10 coil application.

ACCUMULATOR

	Part No.	Application
	458 501 924 2	Kit contains two 750 ccm accumulators labeled with warning statement and two O-rings. For 8 coil and 10 coil application.
	458 501 923 2	Kit contains two O-rings. For 8 coil and 10 coil application.

PRESSURE SUPPLY VALVE

	Part No.	Application
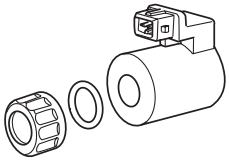	442 879 920 2	Kit contains coil, nut and O-ring. For 8 coil and 10 coil application.
	476 901 920 2	Kit includes solenoid valve with coil, O-ring and nut. For 8 coil and 10 coil application.

HPB

HCU RESERVOIR		
	Part No.	**Application**
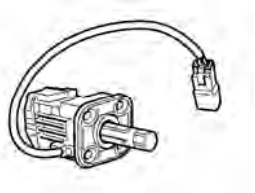	446 280 001 0	Kit contains second generation switch (with new Deutsch connector). 446 280 790 4 (Dash Knob) not included. For 8 coil and 10 coil application.
	446 280 002 0	Kit contains third generation switch (with Deutsch connector and redundancy circuit). 446 280 790 4 (Dash Knob) not included. For 8 coil and 10 coil application.
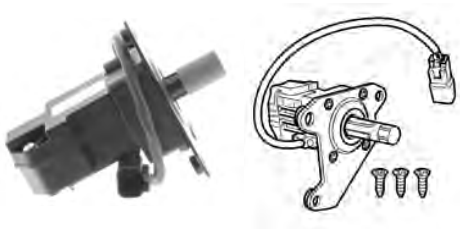	446 280 012 0	Kit contains second generation switch and short bracket. 446 280 790 4 (Dash Knob) not included. For 8 coil and 10 coil application.
	446 280 013 0	Kit contains third generation switch and short bracket. 446 280 790 4 (Dash Knob) not included. For 8 coil and 10 coil application.
	446 280 023 0	Kit contains third generation switch and long bracket. 446 280 790 4 (Dash Knob) not included. For 8 coil and 10 coil application.
	446 280 790 4	Not included in the parking brake switch replacement kit. For 8 coil and 10 coil application.

2

HPB

RELAY VALVE

Part No.	Application
478 407 929 2	With Automatic Traction Control (ATC). Kit contains a relay valve and a seal plate. For 8 coil and 10 coil application.
478 407 937 2	Without ATC. Kit contains a relay valve and a seal plate. For 8 coil and 10 coil application.

TRAVEL SWITCH KIT

Part No.	Application
400 850 844 0	For vehicles built after 2006

HCU HARDWARE

	Part No.	Application
	400 611 013 0	Kit includes four bushings, and four 10 mm screws. For use with front (478 901 052 2) and rear (478 901 053 2) mounting brackets.
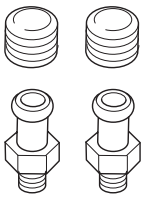	478 407 921 2	Kit contains two relay valve bleeder screws and two protective caps. For 8 coil and 10 coil application.
front bracket 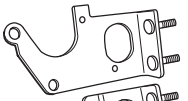	478 901 052 2	Front mounting bracket. Mounting hardware not included. Order Kit 400 611 013 0 for mounting hardware. For 8 coil and 10 coil application.
rear bracket 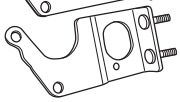	478 901 053 2	Rear mounting bracket. Mounting hardware not included. Order Kit 400 611 013 0 for mounting hardware. For 8 coil and 10 coil application.

HPB

HPB MASTER CYLINDER ASSEMBLY

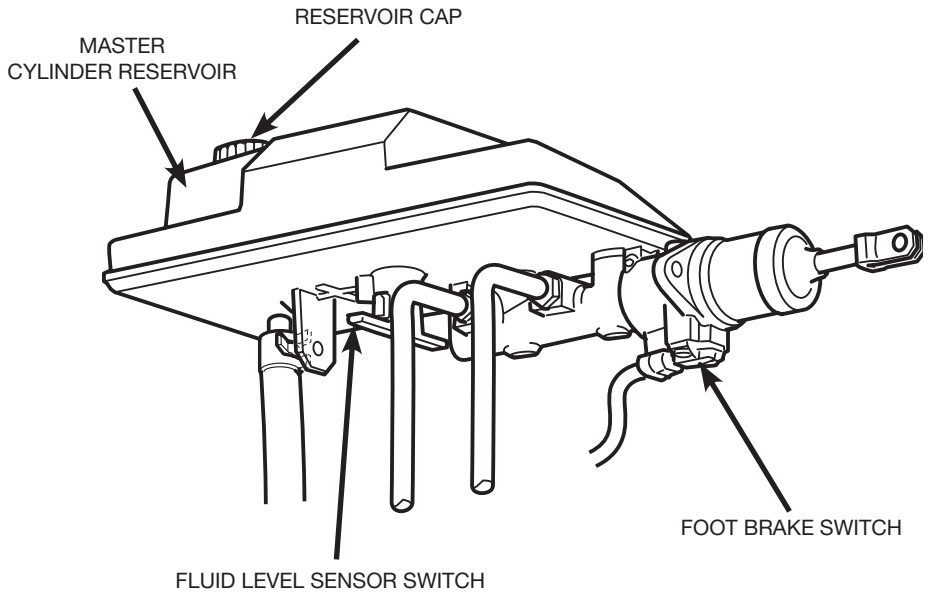

HPB MASTER CYLINDER QUICK REFERENCE

Master Cylinder/Reservoir Assembly Components	10 Coil Bus Part No.	8 Coil Truck Part No.
Master Cylinder/Reservoir Assembly with Travel Switch	468 411 005 0	468 411 005 0
Reservoir with Fluid Level Switch	468 413 020 2	468 413 021 2
Reservoir w/Grommet Kit	400 611 017 0	400 611 018 0
Master Cylinder w/Roll Pin Kit	400 611 016 0	400 611 016 0
Reservoir Cap Kit	451 900 474 2	451 900 474 2
Master Cylinder Bracket	478 901 054 0	478 901 057 2
Travel Switch Kit	400 850 844 0	400 850 844 0
Fluid Level Switch	468 413 921 2	468 413 921 2
Roll Pin Kit	400 611 045 0	400 611 045 0
Rubber Grommet Kit	451 900 924 2	451 900 924 2
Clevis Pin Kit	451 900 925 2	451 900 925 2

2

HPB

MASTER CYLINDER KIT

	Part No.	Application
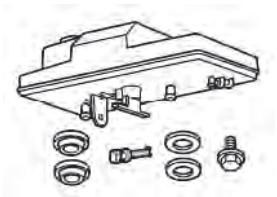	400 611 017 0	Kit contains master cylinder reservoir, fluid level switch, 2 rubber grommets and washers. Cap not included. For bus applications only.
	400 611 018 0	Kit contains master cylinder reservoir, travel switch and screw, 2 rubber grommets and washers. Cap not included. For medium duty truck applications only.
	400 611 016 0	Kit contains master cylinder, screws, 2 rubber grommets and washers, 2 roll pins.
	451 900 474 2	Master cylinder cap. Fits all master cylinder reservoirs. For bus and medium duty truck application.
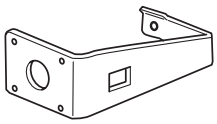	478 901 054 0	Use with master cylinder 468 411 005 0 & reservoir 468 413 020 2. For bus applications.
	478 901 057 2	Use with master cylinder 468 411 005 0 and reservoir 468 413 021 2. For medium duty truck applications.
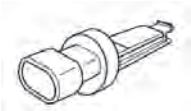	468 413 921 2	Kit contains fluid level switch.
	451 900 925 2	Kit contains one master cylinder clevis pin.
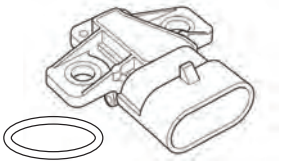	400 850 844 0	Kit contains travel switch, O-ring and 2 screws. For vehicles built after 2006.
	400 611 045 0	Kit contains two roll pins.
	451 900 924 2	Kit contains two rubber grommets.

HPB

RIGHT ANGLE (90º) SENSORS

Part No.	Replaces	Cable Lead		Application
		Feet	Meters	
441 030 924 2	941 032 267 0	3.28	1.00	Installed at wheel ends to measure the motion of a sensed wheel in ABS applications. Sensor kits include sensor with cable leads, spring clip, lubricant and instruction sheet. When replacing a sensor you must also replace the spring clip.

SENSOR EXTENSION CABLES

Part No.	Cable Lead		Application
	Feet	Meters	
449 711 015 0	4.9	1.5	Features blunt cut cable. Two-wire cable that connects the wheel end sensors to the ECU. Do not splice cable wires. Cut cables from the blunt cut end. **Splicing wires will void the warranty.**
449 711 031 0	10.0	3.1	
449 711 050 0	16.4	5.0	
449 711 065 0	21.3	6.5	
449 711 080 0	26.4	8.0	
449 711 100 0	32.8	10.0	
449 711 120 0	39.4	12.0	

SENSOR CLIPS

Part No.	I.D.	O.D.	Length	Application
400 612 027 0	0.63 in. / 16.0 mm	0.71 in. / 18.0 mm	1.18 in. / 30.0 mm	Chrome nickel sensor clip. Contains sensor clip and grease packet. Holds sensor in place.
400 612 028 0				Copper-beryllium sensor clip. Includes sensor clip and grease packet. Holds sensor in place.

2

HABS-E (OEM AND SERVICE PARTS)

PRODUCTION PART NUMBER			SERVICE PART NUMBER		
400 850 905 0	HABS-E Modulator Dry ECU No Blink Code, Bracket	478 407 072 0 with current bracket design	400 850 872 0	HABS-E Modulator Wet ECU without Blink Code with Bracket Kit	Wet/Filled Version
			400 850 866 0	HABS-E Modulator Wet Different Fitting	Wet with ECU blink code disabled
			446 046 925 2	HABS-E ECU 12V No Blink Code Service	ECU (no Valve)
			400 851 001 0	Kit, HABS-E Motor and 7 DEG Bracket	Sub Parts - Motor/ Bracket
			478 407 947 2	Kit, Motor - HABS-E	Sub Part - Motor
			478 901 353 2	HABS-E ACC Bracket 7-DEG	Bracket
			891 490 000 4	Screw/Washer	Accessory
			893 184 685 4	HABS Accessory Port Adapter M12x1	Accessory
478 407 072 0	HABS-E Modulator Dry ECU No Blink Code, Different Fitting	Standard base unit from WABCO	400 850 866 0	HABS-E Modulator Wet ECU w/o Blink Code Kit	Wet/Filled Version
			400 850 866 0	HABS-E Modulator Wet Different Fitting	Wet with ECU blink code disabled
			446 046 925 2	HABS-E ECU 12V No Blink Code Service	ECU (no Valve)
			400 851 001 0	Kit, HABS-E Motor and 7 DEG Bracket	Sub Parts - Motor/ Bracket
			478 407 947 2	Kit, Motor - HABS-E	Sub Part - Motor
			478 901 353 2	HABS-E ACC Bracket 7-DEG	Bracket
			891 490 000 4	Screw/Washer	Accessory
			893 184 685 4	HABS Accessory Port Adapter M12x1	Accessory
478 407 079 0	HABS-E Modulator Dry ECU Blink Code, Different Fitting	Blink code switch measurement parameter turned-on for PACCAR	400 850 866 0	HABS-E Modulator Wet ECU w/o Blink Code Kit	Wet with ECU blink code disabled
			446 047 921 2	HABS-E ECU 12V with Blink Code Service	ECU (no Valve)
			400 851 001 0	Kit, HABS-E Motor and 7 DEG Bracket	Sub Parts - Motor/ Bracket
			478 407 947 2	Kit, Motor - HABS-E	Sub Part - Motor
			478 901 353 2	HABS-E ACC Bracket 7-DEG	Bracket
			891 490 000 4	Screw/Washer	Accessory
			893 184 685 4	HABS Accessory Port Adapter M12x1	Accessory
478 407 071 0	HABS-E Modulator Dry ECU No Blink Code, Same Fitting	Hino - Software - ABS cornering detection	400 851 001 0	HABS-E Motor	Sub Parts - Motor/ Bracket
			478 407 947 2	Kit, Motor - HABS-E	Sub Part - Motor
			478 901 353 2	HABS-E ACC Bracket 7-DEG	Bracket
			891 490 000 4	Screw/Washer	Accessory
			893 184 685 4	HABS Accessory Port Adapter M12x1	Accessory

HABS

D VERSION FRAME MOUNTED ECU HPB 4S/4M

Part No.	New/Service Exchange	Revolutions Per Mile	Volt
446 109 010 0	New	598	12

D VERSION BELL CAP ASSEMBLY

Part No.	Application
478 407 043 2	2 per pack

D VERSION BELL CAP BUSHING

Part No.	Application
478 407 200 4	Made of rubber

ECU D VERSION CAB MOUNTED 4S/4M

Part No.	New/Service Exchange	Revolutions Per Mile	Volt
446 044 085 0	New	549-652	12
446 044 086 0	New	462-549	12

ECU D VERSION FRAME MOUNTED 4S/4M

Part No.	New/Service Exchange	Revolutions Per Mile	Volt
400 850 401 0	New	550-652	12
400 850 402 0	New	462-549	12
400 850 409 0	New	598	12
446 109 011 0	New	500	12

ECU REPAIR KIT

Part No.	Application
400 850 866 0	Repair Kit HABS E Version with Modulator

2

VALVES

D VERSION WET MODULATOR

Part No.	Replaces	Application
478 407 056 0	478 407 055 0	with different fitting
478 407 058 0	478 407 057 0	with same fitting
478 407 060 0	N/A	with different fitting

VALVE ASSEMBLY

Part No.	Replaces	Application
478 407 062 0	478 407 059 0	Related bracket 478 407 055 2 & modulator valve 478 407 058 0

TABLE OF CONTENTS

TITLE	PAGE
AIR DRYER VARIATIONS	3-2
OIL COALESCING CARTRIDGE COMPARISONS	3-3
HP AIR DRYERS	3-4
SYSTEM SAVER® 1200 PLUS AIR DRYERS	3-6
SYSTEM SAVER® 1200 AIR DRYERS	3-9
SYSTEM SAVER® 1800 AIR DRYERS	3-12
SYSTEM SAVER® TWIN AIR DRYERS	3-13
CARTRIDGES	3-16
VALVES	3-17
COMPONENTS	3-20

AIR DRYER VARIATIONS

System Saver® 1200	System regeneration
System Saver® 1200 E	External econ line
System Saver® 1200 P	Uses an external purge tank
System Saver® 1200 Plus	Designed specifically for the North American braking system market. A high-capacity air dryer that uses internal air for regeneration. Contains a spin on/off air dryer cartridge for easier scheduled preventive maintenance. May or may not contain a governor.
System Saver® 1200 U	Uses the discharge line for unloading the compressor
System Saver® 1200 UP	Uses the discharge line for unloading the compressor and has an external purge tank
System Saver® 1800	Provides increased drying volume for heavy-duty applications. Where space allows, the taller WABCO System Saver 1800 air dryer cartridges can be used on System Saver 1200 air dryers to provide increased drying capacity for normal volume applications.
TWIN	A sequential two-cartridge system allowing one side to regenerate while the other side continues to dry air. Designed for compressors that operate almost continuously and demand high volumes of dry air.
HP	Latest generation system series air dryer and 30% lighter than our previous generations
Coalescing Cartridge	Air dryer cartridge containing desiccant materials of the highest quality to absorb more moisture from the air system before it can flow down-stream; also contains additional oil collecting material to prevent oil from contaminating the air system. Increasingly becoming the primary cartridge used in heavy equipment today.
Standard Cartridge	Air dryer cartridge containing desiccant materials of the highest quality to absorb more moisture from your air system before it can flow down-stream.

STANDARD AND COALESCING CARTRIDGES

WABCO offers two options, traditional and coalescing, spin-on-style air dryers.

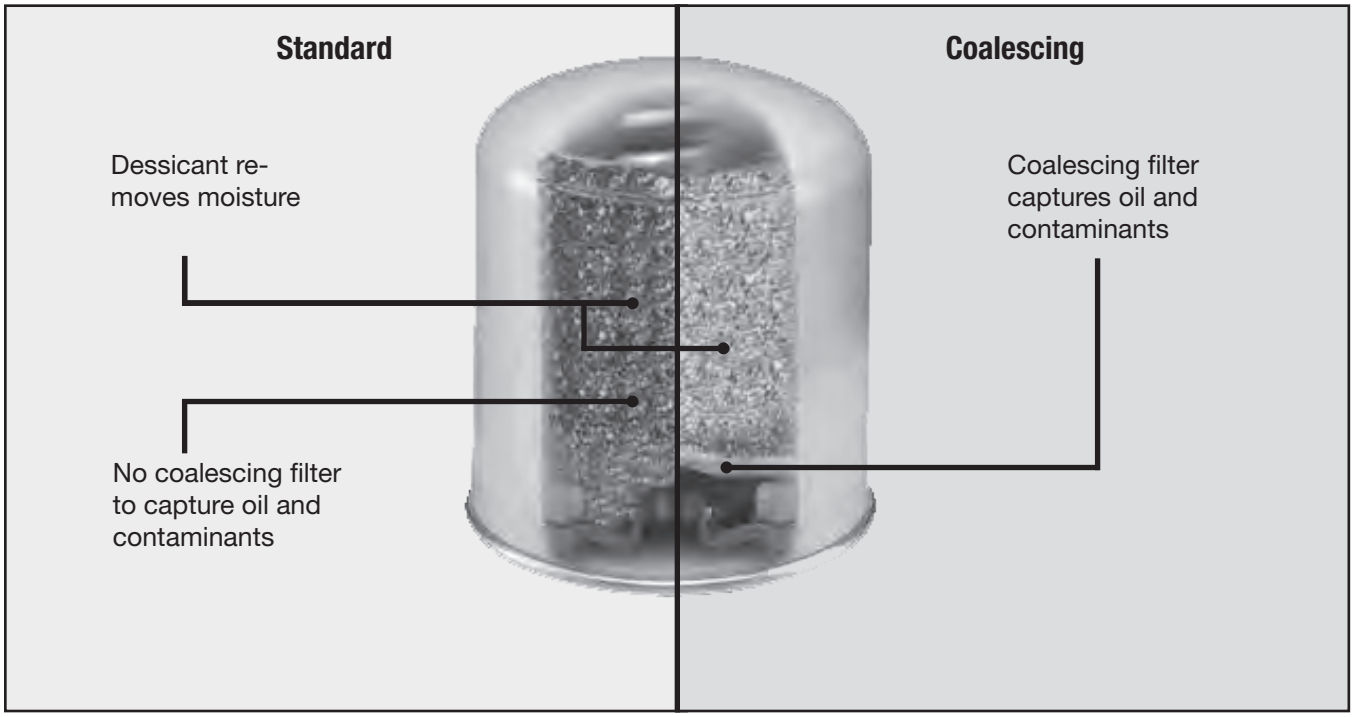

HP AIR DRYERS

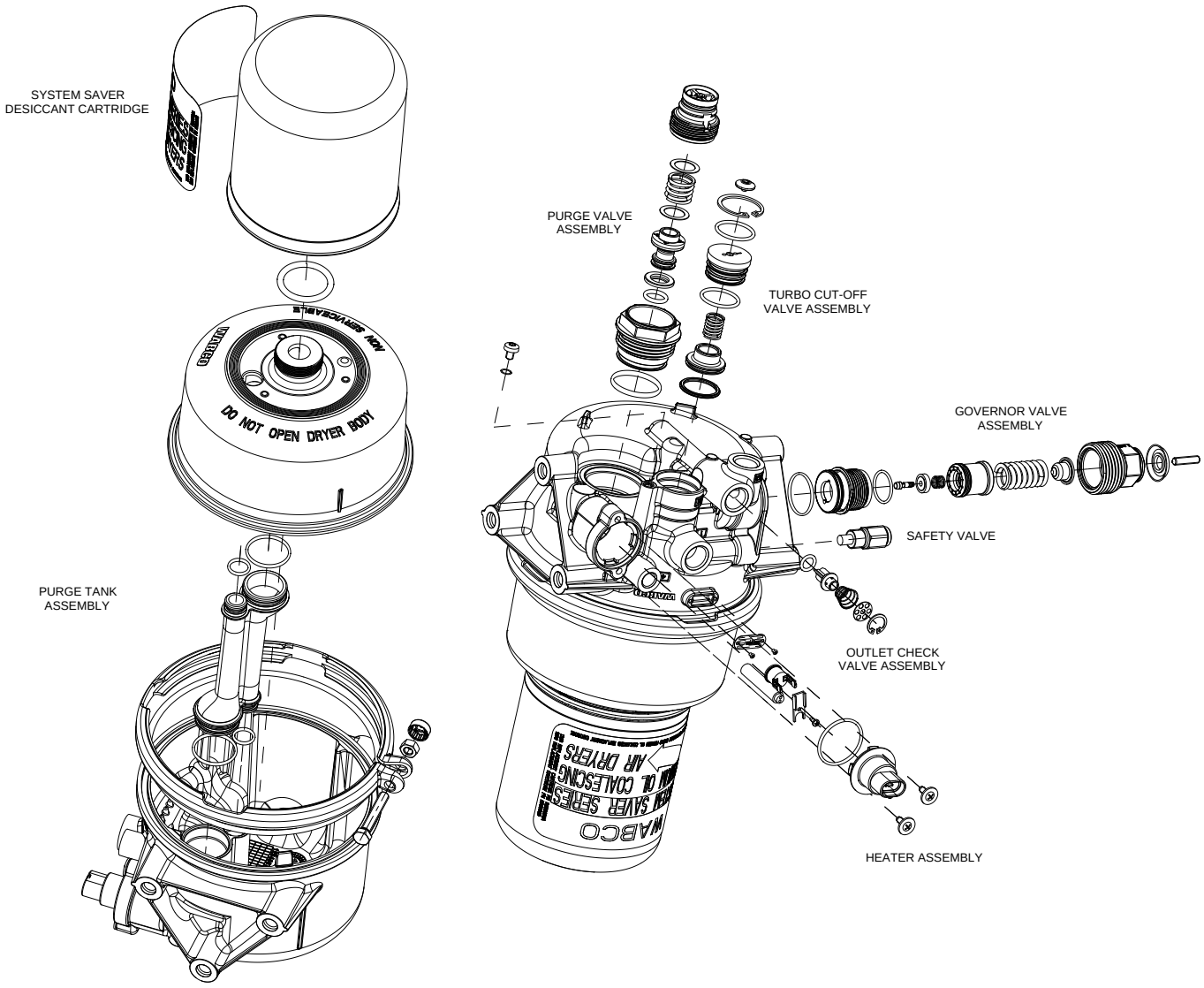

HP AIR DRYERS

HP AIR DRYERS							
	Part No.	New/Service Exchange/Reman	Cartridge	Ports			Turbo Cutoff Valve (Yes/No)
				Control	Delivery	Purge Tank	
IMAGE NOT AVAILABLE AT TIME OF PRINTING	432 480 340 0	NEW	432 420 923 2	1/4"-18 NPTF	1/2" -14 NPTF	1/2" -14 NPTF	Yes
	432 480 341 0	NEW	432 901 248 2	1/4"-18 NPTF	1/2" -14 NPTF	1/2" -14 NPTF	Yes
	432 480 201 0	NEW	432 901 248 2	1/4"-18 NPTF	1/2" -14 NPTF	1/2" -14 NPTF	No
	432 480 301 0	NEW	432 901 248 2	1/4"-18 NPTF	1/2" -14 NPTF	1/2" -14 NPTF	Yes

SYSTEM SAVER® 1200 PLUS SERIES AIR DRYERS

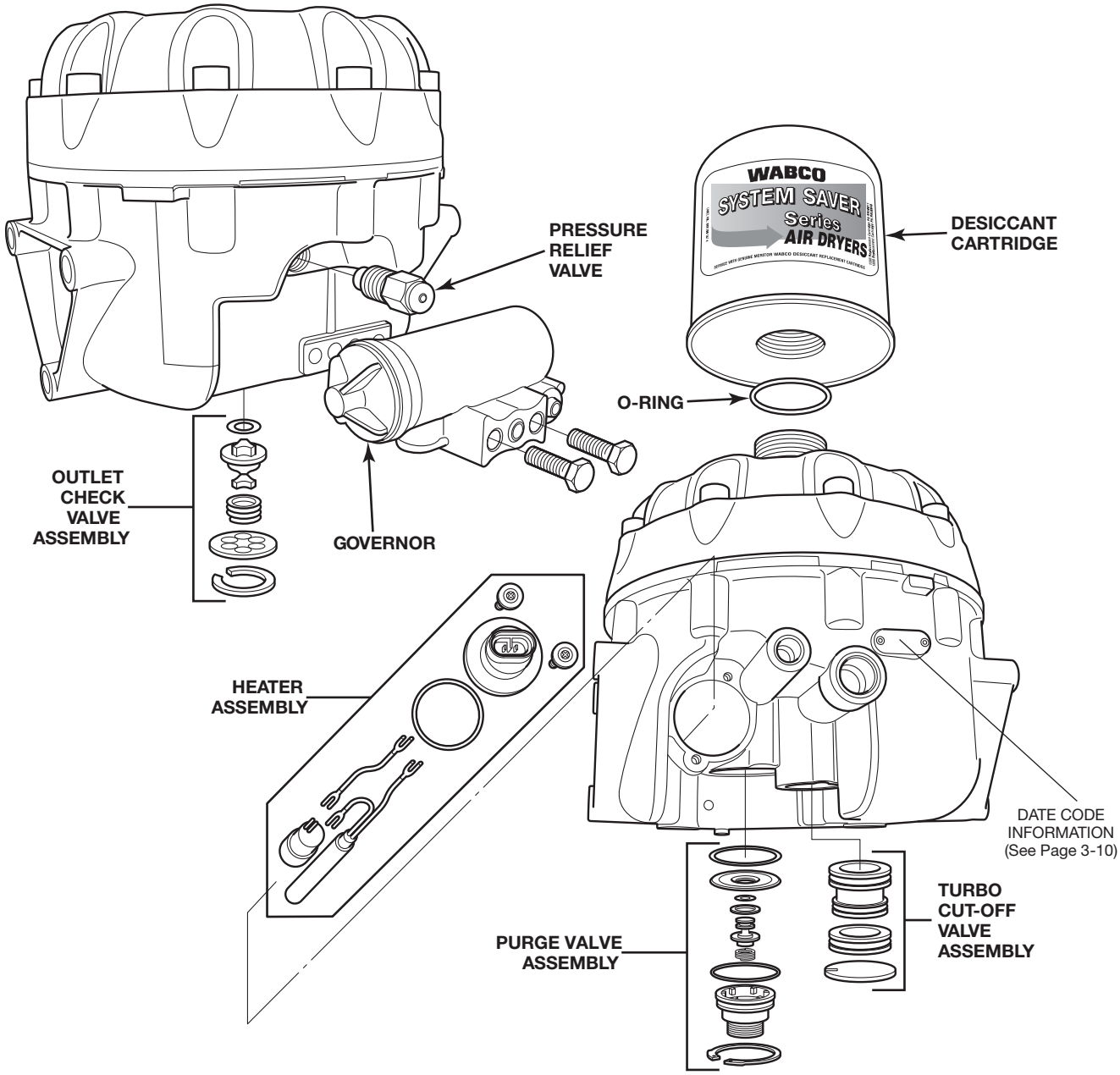

SYSTEM SAVER® 1200 PLUS SERIES AIR DRYERS WITH MULTI CIRCUIT PROTECTION

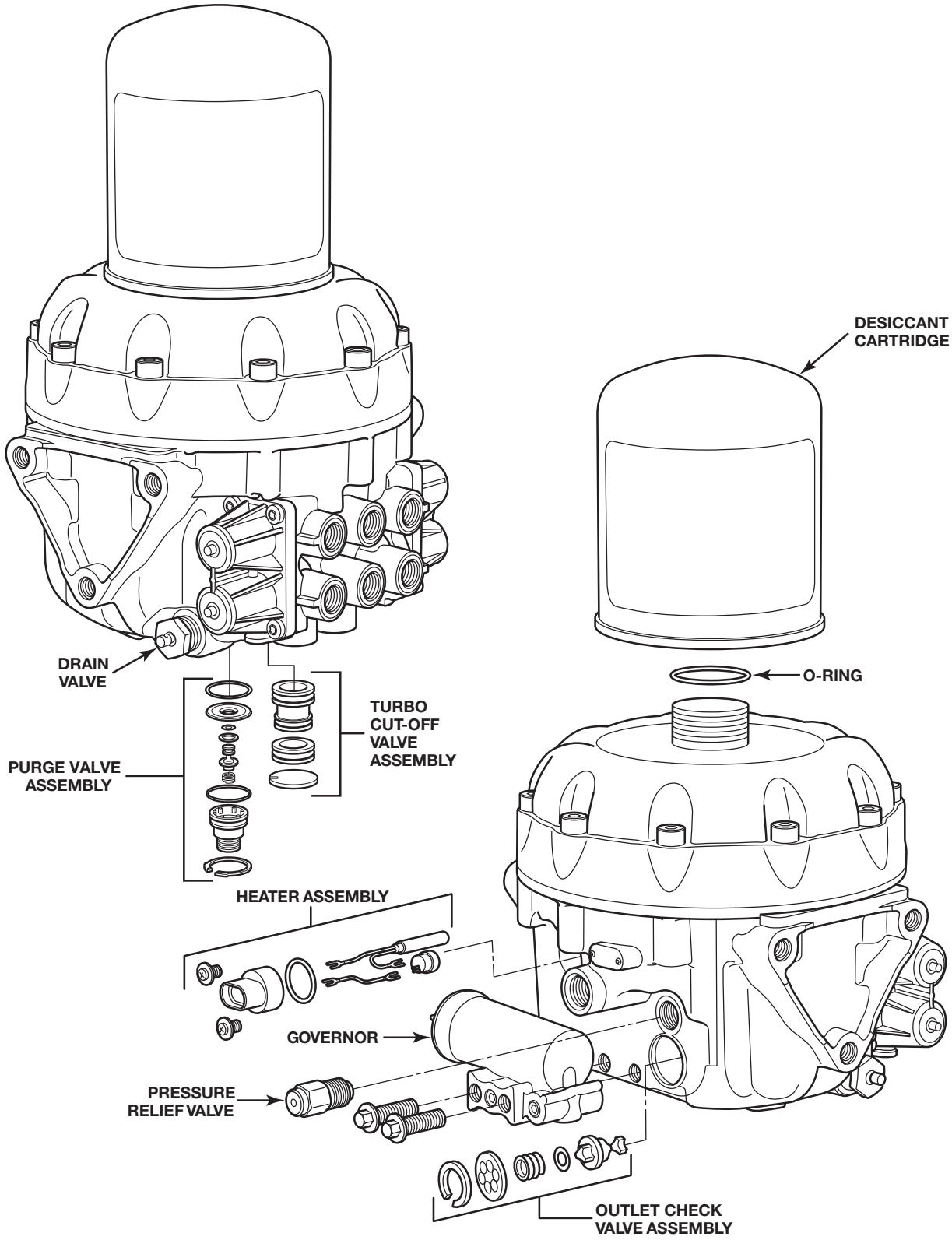

3

SYSTEM SAVER® 1200 PLUS AIR DRYERS

SYSTEM SAVER® 1200 PLUS RETROFIT KIT

Part No.	New/Service Exchange/ Reman	Cartridge	Compressor Rating	Application
400 850 701 0	New	432 420 923 2	< 35CFM	12V System Saver 1200Plus air dryer, retrofit kit for Bendix AD9 air dryers. Contains SS1200 Plus dryer, AD-9 mounting bracket adapter and installation instructions. Does not include the integrated governor.

SYSTEM SAVER® 1200 PLUS 12-VOLT STANDARD

Part No.	New/Service Exchange/Reman	Ports			Turbo Cutoff Valve (Yes/No)
		Control	Delivery	Supply	
432 470 041 0	New	M14x1.5	M22X1.5	M22x1.5	No
432 471 000 0	New	.25-18 NPTF	.50-14 NPTF	.50-14 NPTF	No
432 471 001 0	New	.25-18 NPTF	.50-14 NPTF	.50-14 NPTF	No
432 471 001 7	Service Exchange				
432 471 100 0	New	.25-18 NPTF	.50-14 NPTF	.50-14 NPTF	Yes
432 471 100 7	Service Exchange				
432 471 101 R	Reman				

SYSTEM SAVER® 1200 PLUS 12-VOLT COALESCING

Part No.	New/Service Exchange/Reman	Ports			Turbo Cutoff Valve (Yes/No)
		Control	Delivery	Supply	
432 470 254 0	New	.25-18 NPTF	.50-14 NPTF	.50-14 NPTF	Yes
432 471 101 0	New	.25-18 NPTF	.50-14 NPTF	.50-14 NPTF	Yes
432 471 101 R	Reman				

SYSTEM SAVER® 1200 PLUS 12-VOLT COALESCING WITH MULTI CIRCUIT PROTECTION

Part No.	New/Service Exchange/Reman	Ports			Turbo Cutoff Valve (Yes/No)
		Control	Delivery	Supply	
432 475 101 0	New	.125-27 NPTF	N/A	.50-14 NPTF	Yes
432 475 101 9	Service Exchange		N/A		Yes

SYSTEM SAVER® 1200 PLUS 24-VOLT COALESCING

Plus Series

Part No.	New/Service Exchange/Reman	Ports				Turbo Cutoff Valve (Yes/No)
		Control	Delivery	Purge Tank	Supply	
432 470 021 0	New	.25-18 NPTF	.50-14 NPTF	N/A	.50-14 NPTF	No
432 470 021 R	Reman					

SYSTEM SAVER® 1200 AIR DRYERS
SYSTEM SAVER® 1200/1800 AIR DRYERS

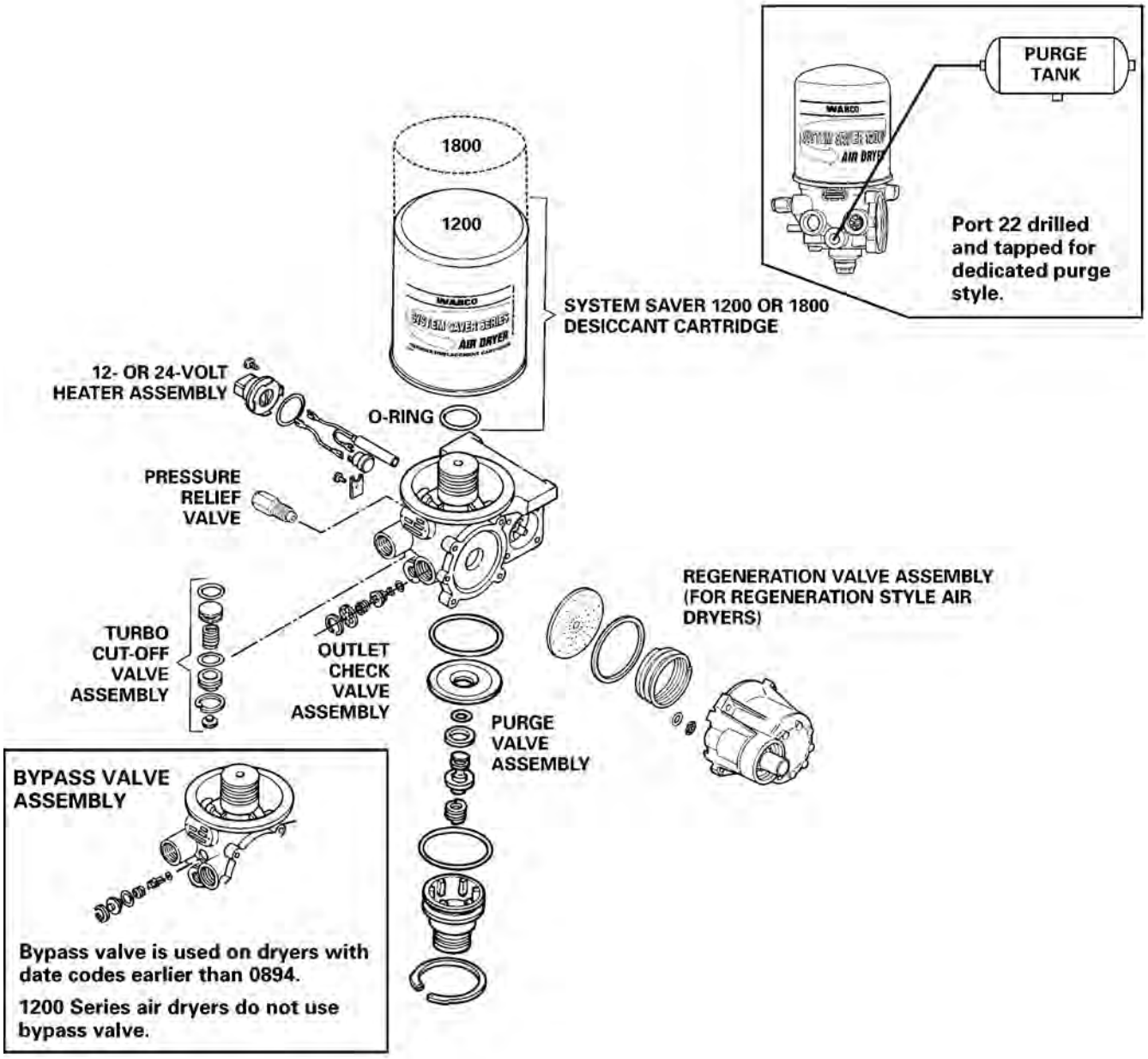

3

SYSTEM SAVER® 1200 AIR DRYERS

SYSTEM SAVER® 1200 12-VOLT STANDARD

	Part No.	WABCO Core No.	New/ Service Exchange/ Reman	Cartridge	Ports: Control	Ports: Delivery	Ports: Purge Tank	Ports: Supply	Repl. Kit*
E Series	432 413 010 0	N/A	New	432 420 923 2	.25 in.-18 NPTF	.50 in.-14 NPTF	.25 in.-18 NPTF	.50 in.-14 NPTF	400 611 057 0
	432 413 010 7	432 413 006 9	Service Exchange						N/A
	432 413 006 R	432 413 006 9	Reman						N/A
U Series	432 413 017 0	N/A	New	432 420 923 2	.25 in.-18 NPTF	.50 in.-14 NPTF	. 25 in.-18 NPTF	.50 in.-14 NPTF	400 611 060 0
	432 413 017 7	432 413 007 9	Service Exchange						N/A
	432 413 007 R	432 413 007 9	Reman						N/A
P Series	432 413 024 0	N/A	New	432 420 923 2	.25 in.-18 NPTF	.50 in.-14 NPTF	. 25 in.-18 NPTF	.50 in.-14 NPTF	400 611 059 0
	432 413 024 7	432 421 009 9	Service Exchange						400 611 063 0
	432 421 009 R	432 421 009 9	Reman						400 611 054 0
	RWABK118	N/A	New	432 420 923 2	.25 in.-18 NPTF	.50 in.-14 NPTF	.25 in.-18 NPTF	.50 in.-14 NPTF	400 611 050 0
	RWABK118S	432 413 001 9	Service Exchange						400 611 061 0
	432 413 001 R	432 413 001 9	Reman						400 611 052 0

*Replacement kit contains power cable, mounting hardware and pressure control check valve.

SYSTEM SAVER® 1200 AIR DRYERS

SYSTEM SAVER® 1200 12-VOLT COALESCING

	Part No.	WABCO Core No.	New/ Service Exchange/ Reman	Cartridge	Ports				Repl. Kit*
					Control	Delivery	Purge Tank	Supply	
UP Series	432 421 033 0	N/A	New	432 901 248 2	.25 in.-18 NPTF	.50 in.-14 NPTF	.25 in.-18 NPTF	.50 in.-14 NPTF	N/A
	432 421 033 7	432 421 011 9	Service Exchange						N/A
	432 421 032 R	432 421 011 9	Reman						N/A
	432 421 040 0	N/A	New	432 901 248 2	.25 in.-18 NPTF	.50 in.-14 NPTF	.25 in.-18 NPTF	.50 in.-14 NPTF	N/A
P Series	432 421 048 0	N/A	New	432 901 248 2	.25 in.-18 NPTF	.50 in.-14 NPTF	. 25 in.-18 NPTF	.50 in.-14 NPTF	400 611 058 0
	432 421 048 7	432 421 009 9	Service Exchange						400 611 062 0
	432 421 037 R	432 421 009 9	Reman						400 611 053 0
	400 850 180 0	N/A	New	432 901 248 2	.25 in.-18 NPTF	.50 in.-14 NPTF	.25 in.-18 NPTF	.50 in.-14 NPTF	N/A

*Replacement kit contains power cable, mounting hardware and pressure control check valve.

ECAD COALESCING

	Part No.	New/Service Exchange/ Reman	Cartridge	Ports			
				Control	Delivery	Purge	Supply
	432 425 200 0	New	432 901 248 2	.25-18 NPTF	.50-14 NPTF	.25-18 NPTF	.50-14 NPTF

3

SYSTEM SAVER® 1200 AIR DRYERS

SYSTEM SAVER® 1200 24-VOLT STANDARD

	Part No.	WABCO Core No.	New/Service Exchange/ Reman	Cartridge	Ports				Repl. Kit*
					Control	Delivery	Purge Tank	Supply	
UP Series	432 413 025 0	N/A	New	432 420 923 2	.25 in.-18 NPTF	.50 in.-14 NPTF	. 25 in.-18 NPTF	.50 in.-14 NPTF	N/A
	432 421 010 R	432 421 009 9	Reman						N/A
	RWABK119	N/A	New	432 420 923 2	.25 in.-18 NPTF	.50 in.-14 NPTF	. 25 in.-18 NPTF	.50 in.-14 NPTF	400 611 051 0
	RWABK119S	432 413 001 9	Service Exchange						N/A
	432 413 002 R	432 413 001 9	Reman						N/A

*Replacement kit contains power cable, mounting hardware and pressure control check valve.

SYSTEM SAVER® 1800 AIR DRYERS

SYSTEM SAVER® 1800 12-VOLT STANDARD

	Part No.	New/Service Exchange/ Reman	Cartridge	Ports				Repl. Kit
				Control	Delivery	Purge Tank	Supply	
P Series	432 413 063 0	New	432 410 934 2	.25 in.-18 NPTF	.50 in.-14 NPTF	.25 in.-18 NPTF	.50 in.-14 NPTF	N/A

SYSTEM SAVER® 1800 12-VOLT COALESCING

	Part No.	WABCO Core No.	New/ Service Exchange/ Reman	Cartridge	Ports				Repl. Kit
					Control	Delivery	Purge Tank	Supply	
UP Series	432 421 052 0	N/A	New	432 421 922 2	.25 in.-18 NPTF	.50 in.-14 NPTF	.25 in.-18 NPTF	.50 in.-14 NPTF	432 421 052 0
	432 421 052 7	432 421 011 9	Service Exchange						N/A
	432 421 038 R	432 421 011 9	Reman						432 421 052 0
P Series	432 421 054 0	N/A	New	432 421 922 2	.25 in.-18 NPTF	.50 in.-14 NPTF	.25 in.-18 NPTF	.50 in.-14 NPTF	432 421 054 0
	432 421 054 7	432 421 009 9	Service Exchange						N/A
	432 421 039 R	432 421 009 9	Reman						N/A

SYSTEM SAVER® TWIN AIR DRYERS
ORIGINAL SYSTEM SAVER® TWIN AIR DRYER

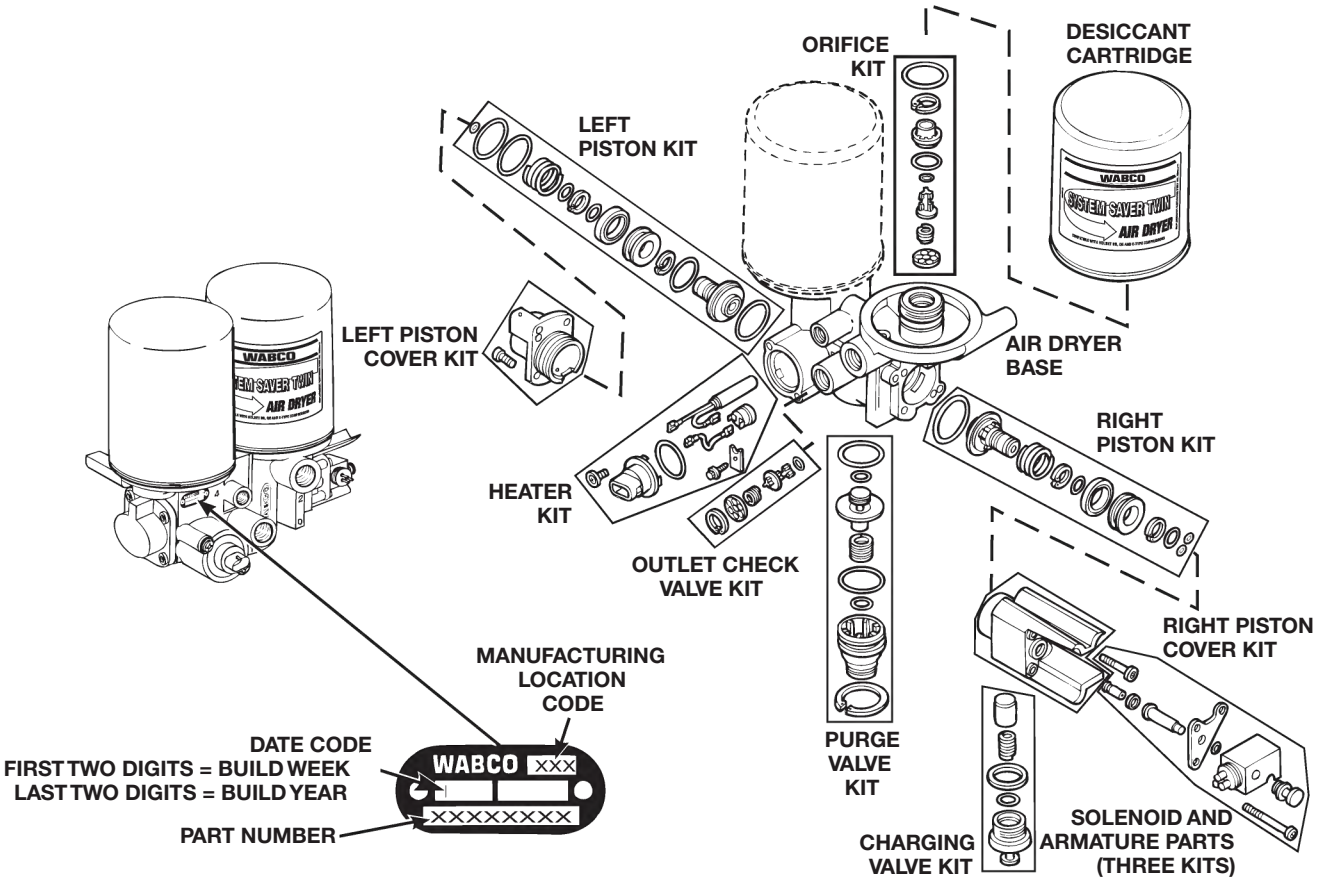

For Technical Support, please see:
MM-35 System Saver® Twin Air Dryers

SYSTEM SAVER® TWIN AIR DRYERS

"NEW" SYSTEM SAVER® TWIN AIR DRYER

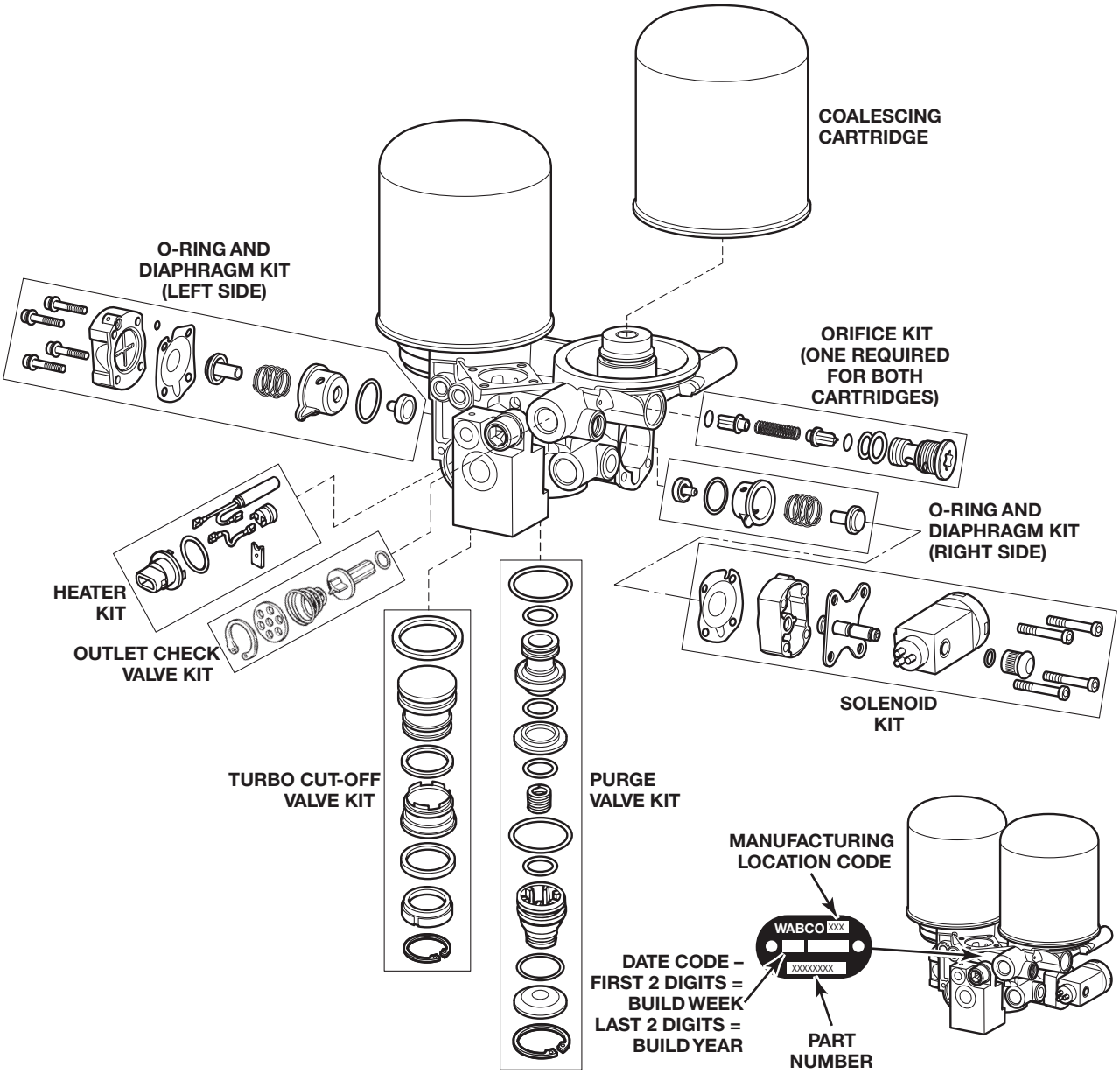

SYSTEM SAVER TWIN AIR DRYERS

TWIN 12 VOLT COALESCING

	Part No.	New/ Service Exchange/ Reman	Compressor Rating	Orifice Size	Thread Size			Replaces	Cartridge	Repl. Kit
					Control	Delivery	Supply			
	432 433 042 0	New	24-40 CFM	1.0mm	.25 in.-18 NPTF	(1 each) .50 in.-14 NPTF		432 431 028 0	432 901 248 2	N/A

TWIN 12 VOLT COALESCING

	Part No.	WABCO Core No.	New/ Service Exchange/ Reman	Compressor Rating	Orifice Size	Thread Size			Replaces	Cartridge	Repl. Kit
						Control	Delivery	Supply			
	432 433 036 0	N/A	New	24-40 CFM	1.0mm	.25 in. -18 NPTF	.50 in.-14 NPTF		432 431 012 0	432 901 248 2	400 611 049 0
	432 433 006 R	432 433 006 9	Reman								N/A
	432 433 040 0	N/A	New	Less than 25 CFM	0.8mm	.25 in. -18 NPTF	.50 in.-14 NPTF		432 431 016 0	432 901 248 2	400 611 048 0
	432 433 010 R	432 433 006 9	Reman								N/A
	432 433 048 0	N/A	New	24-40 CFM	1.0mm	25 in. -18 NPTF	.50 in.-14 NPTF		N/A	432 901 248 2	N/A

3

SYSTEM SAVER TWIN AIR DRYERS

TWIN 24 VOLT COALESCING

Part No.	WABCO Core No.	New/ Service Exchange/ Reman	Compressor Rating	Orifice Size	Thread Size: Control	Thread Size: Delivery	Thread Size: Supply	Replaces	Cartridge	Repl. Kit
432 433 038 0	N/A	New	24-40 CFM	1.0mm	.25 in. -18 NPTF	.50 in.-14 NPTF		432 431 014 0	432 901 248 2	N/A
432 433 008 R	432 433 006 9	Reman								
432 433 041 0	N/A	New	Less than 25 CFM	0.8mm	.25 in. -18 NPTF	.50 in.-14 NPTF		432 431 017 0	432 901 248 2	N/A
432 433 011 R	432 433 006 9	Reman								

CARTRIDGES

CARTRIDGES

	Part No.	Application
	432 420 923 2	Standard cartridge for use on System Saver and 1200 Series and TWIN air dryers
	432 901 248 2	Coalescing version of System Saver 1200 and TWIN air dryer and other spin-on dryer applications. Improved oil separation verses conventional cartridges. Includes special threads.
	432 410 934 2	Standard cartridge for use on System Saver 1800 Series air dryers. Can be retrofitted to an existing SS1200 air dryer to increase drying capacity.
	432 421 922 2	Coalescing version of System Saver 1800 air dryer and other spin-on dryer applications. Improved oil separation verses conventional cartridges. Requires more frequent service intervals.
	432 901 223 2	Essential cartridge. This coalescing cartridge is designed to replace any competitor spin on style cartridges on second and third owner vehicles
	432 410 222 7	Essential cartridge: This standard cartridge is designed to replace any competitor spin on style cartridges on second and third owner vehicles

VALVES

VALVE KITS

	Part No.	Valve Type	Kit Contents	Application
	432 413 920 2	Regeneration	Diaphragm, Cap, Compression Spring, Valve Housing, Capscrews	For dryers with date codes earlier than 2295. For SS1200 and SS1800 models.
	432 413 934 2	Turbo Cut-Off	Plug, Retainer Ring, Cover, O-ring, Compression Spring, Piston (valve), Lip Seal	If you are replacing the turbo cut-off valve on a System Saver 1200E air dryer, please contact your distributor.
	432 413 929 2	Purge	O-rings, Washer, Piston Assembly, Shims, Spring, Valve Head, Retainer Ring	Install washer with lip facing piston seat. Shims may not be included in this kit. If not included, they are not required. If included, they must be installed above and below the spring. Kit is for use on all single cartridge dryers with U.S. (NPTF) ports.
	432 413 923 2	12-volt Heater Assembly	Mounting Screws (2), Wiring Connector, O-ring, Wire, Heater, Thermostat, Plastic Retainer, Retainer Screw	12-volt heater kit for dryers with date code 0994 and later. For all System Saver Series Air Dryers.
	432 413 924 2	24-volt Heater Assembly	Mounting Screws (2), Wiring Connector, O-ring, Wire, Heater, Thermostat, Plastic Retainer, Retainer Screw	For all 24-volt System Saver Series Air Dryers.
	432 413 925 2	Outlet Check	O-ring, Valve Body, Compression Spring, Washer, Retainer Ring	Kit is for use on SS1200 and SS1800 air dryers with U.S. (NPTF) ports.
	432 413 930 2	Regeneration	Diaphragm, Cap, Compression Spring, Valve Housing, Capscrews	For dryers with date codes 2295 and later. For use with all System Saver Series Air Dryers.

VALVES

VALVE KITS

	Part No.	Valve Type	Kit Contents	Application
	432 413 932 2	Turbo Cut-Off	Plug, Retainer Ring, Cover, O-ring, Compression Spring, Piston (valve), Lip Seal	For use with 1200E air dryer with Econ Valve Kit.
	432 431 924 2	Purge	O-rings, Piston Assembly, Spring, Shim, Valve Body and Retainer Ring	Shim may not be included with this kit. If not included, it is not required. If included, install below compression spring. For use with all System Saver Series Twin Air Dryers.
	432 431 924 2	Purge	O-rings, Piston Assembly, Spring, Shim, Valve Body and Retainer Ring	For use on air dryer part numbers 432 431 xxx x and 432 433 xxx x, System Saver Series Twin Air Dryers.
	432 431 925 2	Check	O-ring, Valve Body, Compression Spring, Washer, Retainer Ring	Outlet Check Valve lit for System Saver Twin Models with part numbers 432 431 xxx x, System Saver Series Twin Air Dryers.
	432 413 929 2	Purge	O-rings, Piston Assembly, Spring, Shim, Valve Body and Retainer Ring	Install washer with lip facing piston seat. Shims may not be included in this kit. If not included, it is not required, System Saver Series Twin Air Dryers.
	432 431 930 2	Relief	O-ring, Piston Assembly, spring, Washer, Nut, Plug	Charging Valve Kit for System Saver Series Twin Air Dryers.
IMAGE NOT AVAILABLE AT TIME OF PRINTING	432 413 932 2	Turbo Cut-Off	Plug, Retainer Ring, Cover, O-ring, Compression Spring, Piston (valve), Lip Seal	Turbo Cut-Off Piston design change on all units with date code of 3108 or later backwards compatible.
	432 413 934 2	Turbo Cut-Off	Plug, Retainer Ring, Cover, O-ring, Compression Spring, Piston (valve), Lip Seal	Replaces the turbo cut-off valve on a System Saver 1200E air dryer.
	432 470 921 2	Turbo Cut-Off	Plug, Retainer Ring, Cover, O-ring, Compression Spring, Piston (valve), Lip Seal	For use with the System Saver 1200+ Air Dryers and System Saver Series Twin Air Dryers with 432 433 xxx x part numbers.

VALVES

VALVE KITS

	Part No.	Valve Type	Kit Contents	Application
	432 470 922 2	Check	O-ring, Valve Body, Compression Spring, Retainer Ring	For use with the System Saver 1200+ Air Dryers and System Saver Series Twin Air Dryers with 432 433 xxx x part numbers.
	RWABK085	Pressure Relief	Pressure Relief Valve, Street Tee Fitting	Use on all System Saver Series dryers without integral relief valve.

INDIVIDUAL VALVES

	Part No.	Valve Type	Length	Threads	Application
	2206 D 1226	Pressure Relief		Port: 3/8 in.-18 NPTF	Valve sold separately or as part of kit SRWABK085.
IMAGE NOT AVAILABLE AT TIME OF PRINTING	432 480 005 2	Turbo Cutoff	Plug, Retainer Ring, Cover, O-ring, Compression	HP Air Dryer	
IMAGE NOT AVAILABLE AT TIME OF PRINTING	432 470 922 2	Check	Spring, Piston (valve), Lip Seal	HP Air Dryer	
IMAGE NOT AVAILABLE AT TIME OF PRINTING	2206D1226	Pressure Relief	O-ring, Piston Assembly, spring, Washer, Nut, Plug	HP Air Dryer	
IMAGE NOT AVAILABLE AT TIME OF PRINTING	432 480 002 2	Purge	O-Rings, Washer, Compression spring	HP Air Dryer	
	434 100 310 0	PC Check	3.25 in.	.50 in.-14 NPTF	Acts as a one-way check valve when pressure drops below 90 psi.
	RWABC015	Check	N/A	N/A	Assembly consists of check valve and pipe nipple. Use with Holset E-Type compressor systems.
	RWABC017	Back Pressure Control Valve	N/A	N/A	For bulk unloading, or Central Tire Inflation (CTI) Systems.

3

COMPONENTS

GOVERNORS

	Part No.	New/ Reman	Cut-In	Cut-Out	Port Size	Thread Size	Tightening Torque	Application
	432 470 920 2	New	105 - 110 psi	129- 135 psi	1/8-27 NPTF	N/A	N/A	SS1200 Plus Governor Kit
	432 480 003 2	New	112 ± 7 psi	125- 135 psi	N/A	M42 x 3	M = 8 +2 Nm	HP Governor Kit

ADDITIONAL PARTS

	Part No.	Description
	432 407 070 0	Silencer
	891 490 830 4	Screw
	432 413 933 2	O-ring Kit

PISTON KIT

	Part No.	Kit Contents	Application
	432 431 931 2	5 O-rings 1 Spring 2 Snap Rings 1 Grease Pack	Right Hand For System Saver Twin Models with 432 431 xxx x part numbers.
	432 431 932 2	7 O-rings 2 Snap rings 1 Spring 1 Grease Pack	Left Hand For System Saver Twin Models

HEATER POWER CORD

	Part No.	Gage	Length	Application
	894 607 431 0	14-gage	12 in.	Metri-Pack plug provides electrical connection to air dryer heating unit 432 431 xxx x part numbers.

TABLE OF CONTENTS

TITLE	PAGE
CHECK VALVES	4-2
DRAIN VALVES	4-3
FOOT OPERATED VALVES	4-5
GLADHANDS	4-6
GOVERNORS	4-7
HAND OPERATED VALVES	4-8
INVERSION VALVES	4-11
PRESSURE RELIEF VALVES	4-12
QUICK RELEASE VALVES	4-13
REGULATING VALVES	4-15
RELAY VALVES	4-16
TRACTOR PROTECTION VALVES	4-19
ACCESSORIES — ELECTRICAL	4-20
ACCESSORIES	4-20
ACCESSORIES — TREADLES	4-21
ADDITIONAL VALVES AND PARTS	4-22

CHECK VALVES

ONE-WAY CHECK VALVES

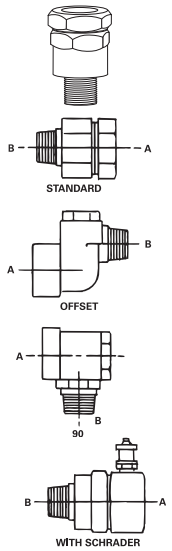

Part No.	A (F)	B (M)	Length	Weight	Remarks
RN13526BR	1/4	1/4 F	N/A	N/A	N/A
CKN23000	1/2	1/2	2.47	0.8 lbs.	Heavy duty, sealant on threads
CKN23010	3/8	3/8	2.47	0.8 lbs.	Heavy duty/standard
CKN23040	3/4	3/4	2.31	0.12 lbs.	Standard
CKN23060	1/2	1/2	1.85	0.21 lbs.	Brass — 90° style, sealant on threads
CKN23080	1/4	1/4 F	1.85	0.12 lbs.	N/A

TWO-WAY CHECK VALVES — SHUTTLE TYPE

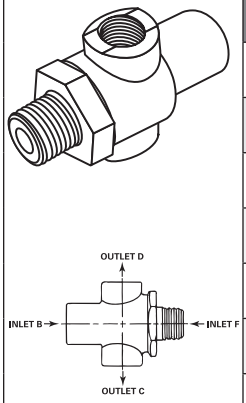

Part No.	Inlet B	Outlet C	Outlet D	Inlet F
RKN25080	3/8 F	3/8 F	1/4 F	3/8 M
RKN25090	3/8 F	3/8 F	1/4 F	3/8 F
RKN25080	1/4 M	1/4 F	1/4 F	3/8 M
RKN25100	3/8 F	3/8 F	3/8 F	1/2 M
RKN25110	3/8 M	3/8 F	3/8 F	3/8 F
RKN25120	1/4 F	1/4 F	1/4 F	1/4 F
RKN25061	3/8	3/8	3/8	(Mtg. Lug)

TWO-WAY CHECK VALVES — DIAPHRAGM TYPE

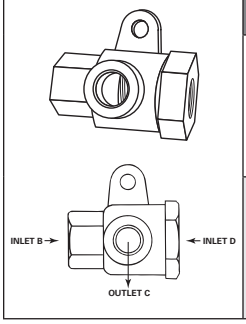

Part No.	Inlet B	Outlet C	Outlet D
RKN25060	3/8 F	3/8 F	3/8 F
RKN25060	3/8 F	3/8 F	3/8 F

F = Female, M = Male

DRAIN VALVES

MANUAL

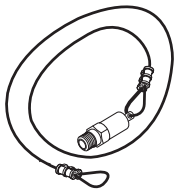

style A

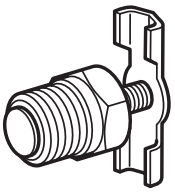

style b-1

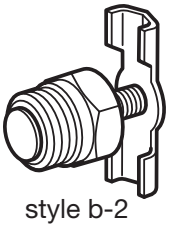

style b-2

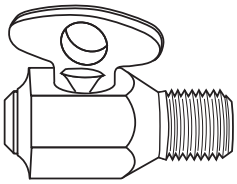

style c

Part No.	Cable Length	Drain Valve Style	Application
R12110	—	C	Wet or dry tank drain valve
R12102	24 in.	A	Wet or dry tank drain valve
RKN21004	48 in.	A	Wet or dry tank drain valve
RKN21008	96 in.	A	Wet or dry tank drain valve
R12104	20 in.	A	Wet or dry tank drain valve
934 315 043 0	12 in.	A	Wet or dry tank drain valve
934 315 044 0	14 in.	A	Wet or dry tank drain valve

4

DRAIN VALVES

Part No.	Cable Length	Drain Valve Style	Application
934 315 045 0	19 in.	A	Wet or dry tank drain valve
934 315 046 0	20 in.	A	Wet or dry tank drain valve
934 315 047 0	24 in.	A	Wet or dry tank drain valve
934 315 048 0	30 in.	A	Wet or dry tank drain valve
934 315 049 0	32 in.	A	Wet or dry tank drain valve
934 315 050 0	36 in.	A	Wet or dry tank drain valve
934 315 051 0	38 in.	A	Wet or dry tank drain valve
934 315 054 0	2.94 in. dia.	N/A	Wet or dry tank drain valve
R12112	N/A	B-2 1/4 Pipe Thread	Wet or dry tank drain valve

AUTOMATIC, HEATED

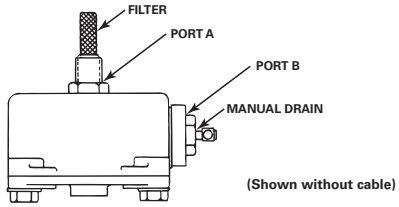

Part No.	Manual Drain Valve	Cable Length	Port In Which Manual Drain Is Mounted
RKN24003	Yes	60 in.	B

AUTOMATIC, NON-HEATED

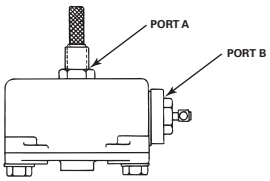

Part No.	Manual Drain Valve	Cable Length	Port In Which Manual Drain Is Mounted
RKN24000	Yes	60 in.	A

FOOT OPERATED VALVES

MANUAL FOOT VALVE

Part No.	Supply Port	Delivery Port	Mounting Studs	Application
WKN22150	(4) 3/8 in.	(4) 3/8 in.	5/16-24 x 5/8	Furnished less treadle and mounting brackets.

DUAL CIRCUIT VALVES

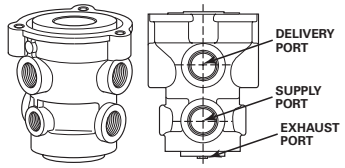

Part No.	Ports		Mounting Studs		Application
	Del.	Sup.	Thd.	Length	
WKN22100	1/2	1/2	N/A	N/A	N/A

DUAL CIRCUIT VALVES

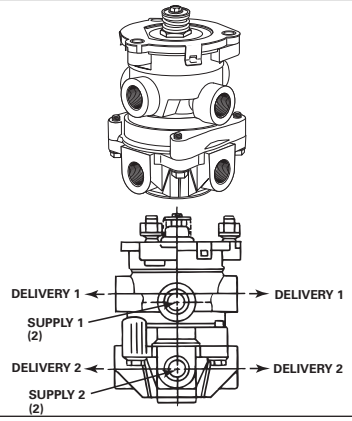

Part No.	Ports		Mounting Studs		Application
	Del.	Sup.	Thd.	Length	
WKN22150	3/8	3/8	5/16-24	5/8	With studs, nuts, lockwashers

SINGLE OR DUAL CIRCUIT FOOT VALVE AND PEDAL

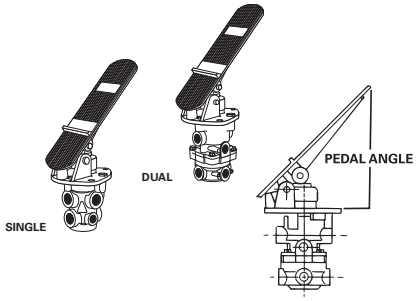

Part No.	Pedal Angle	Type	Application
RKN22600	45°	Single	Off-Highway application
WKN22521	34°	Dual	
WKN22501	45°	Dual	
RKN22610	27°	Single	Off-Highway application
961 899 218 0	47°	Dual	Freightliner P3 Cascadia

4

GLADHANDS

HOSE COUPLERS (GLADHANDS) CONVENTIONAL STYLE

Type I - R10028

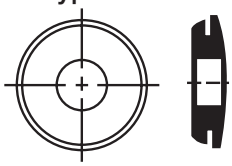

Type II - R10029

Type III - R10029

Part No.	Material Composition	Configuration	Seal Type	Filter
R11450	Aluminum/Steel	Universal	I	No
R11460	Aluminum/Steel	Universal	I	Yes
R11402	No Vent	Dummy and Chain Assembly	N/A	N/A
R11401	No Vent	Dummy and Chain Assembly	N/A	N/A
R11451	Aluminum/Steel	Emergency	I	No
R11452	Aluminum/Steel	Service	I	No
R11461	Aluminum/Steel	Emergency	III	No

SEAL

Part No.	Material Composition	Configuration
R10028	Nitrile	100 per pack
R10029	N/A	100 per pack

GOVERNORS

PISTON TYPE

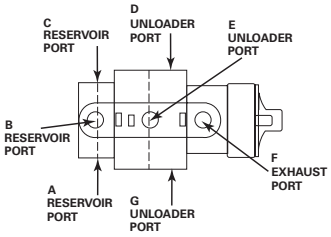

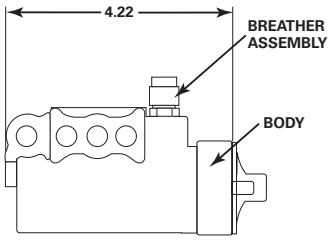

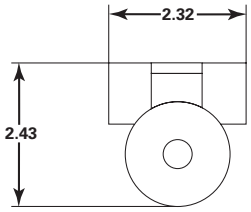

Part No.	Port Thread Size Res.	Port Thread Size Unl.	Port Thread Size Exh.	Cut-In Pressure Range	Ports A	B	C	D	E	F	G	Application
WKN18532	1/8-27NPTF	1/8-27NPTF	1/8-27NPTF	105	P	P	O	P	P	O	O	N/A

4

4

HAND OPERATED VALVES

TRAILER BRAKE CONTROL

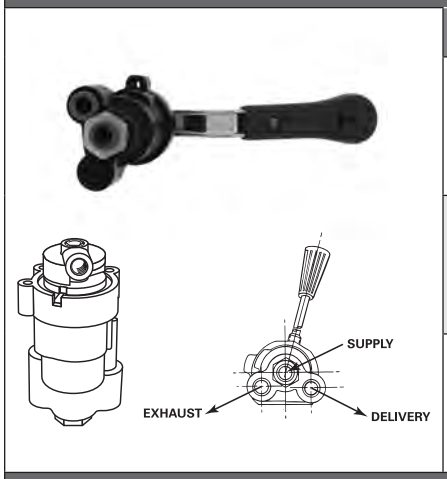

Part No.	Ports	Type	Travel	Handle	Application
RKN20541	1/4	Holdingw	70°	RKN20543	In-column mount
RKN20542	1/4	Self-Return	50°	RKN20543	In-column mount
RKN20545	3/8 PTC/1/4 PTC exhaust	Self-Return	50°	Yes	In-column mount

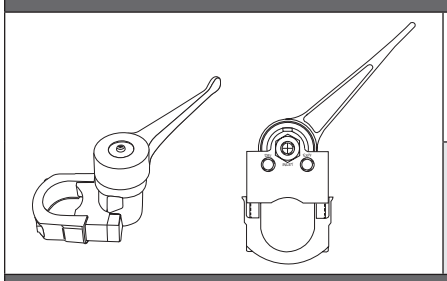

Part No.	Ports	Type	Travel	Handle	Application
RKN20561	1/4	Self-Return	70°	Yes	External steering column mount
RKN20562	1/4	Self-Return	70°	Yes	External steering column mount

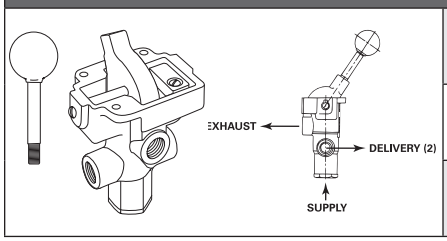

Part No.	Ports	Type	Travel	Handle	Application
RKN20580	1/4	Self-Returning	58°	Yes	Panel mount
RKN20590	1/4	Self-Returning	58°	Yes	Panel mount
RKN20581	1/4	Holding	58°	Yes	Panel mount

SINGLE FLIPPER STYLE

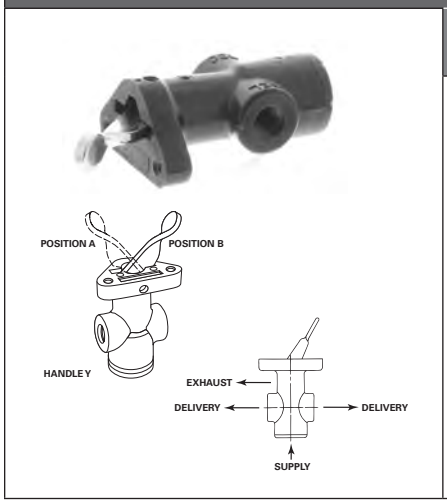

Part No.	Release Position	Type	Mounting Holes	Handle Finish
RKN20001	A	Y	(1) #10-24, (1) .22 dia.	Chrome

HAND OPERATED VALVES

DOUBLE FLIPPER STYLE

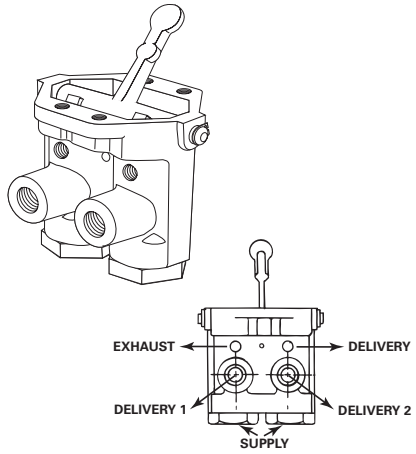

Part No.	Applied/Hold Positions	Port Sizes		
		Supply A	Supply B	Delivery 2 Places
RKN20080	1	1/4	1/4	1/8
RKN20090	2	1/4	1/4	1/8
RN15791H*	2	Plug	1/4	1/8
RN15791T	3	1/8	1/8	1/8
RN15791V*	2	Plug	1/4	1/8

PARK BRAKE VALVES — 2-KNOB

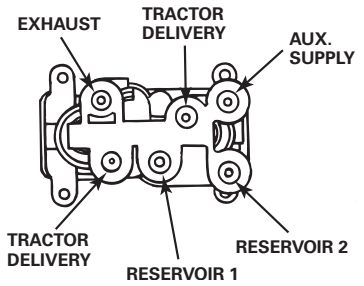

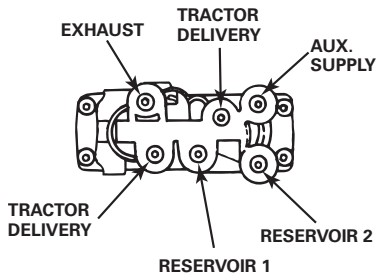

Part No.	4-Mounting Holes Threaded Inserts	Mounting/ Knob Orientation	Ports	Application
RKN20615	.28 dia.	Horizontal	1/4	N/A
RKN20606	1/4-20 UNC-2B	Horizontal	1/4	Volvo/GM cover part; standard mounting pattern
RKN20607	M6 x 1-6H	Vertical	3/8 PTC	Volvo Application
RKN20612	10-24 UNC-2B	Horizontal	1/4	N/A
RKN20611	1/4-20 UNC-2B	Horizontal	1/4	N/A
RKN20622	5/16 dia.	Vertical	3/8 PTC	Freightliner Application
RKN20619	.24 dia.	Horizontal	3/8 PTC	Volvo Application
RKN20632	N/A	Horizontal	3/8 PTC	Horizontal - M6 metric nuts on cover
RKN20636	N/A	Horizontal	3/8 PTC	Made

4

HAND OPERATED VALVES

PARK BRAKE VALVES — 1-KNOB

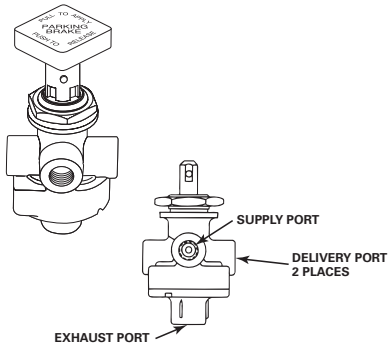

Part No.	Pop Pressure	Application
RKN20021	35 ± 10 psi	N/A
RKN20022	35 ± 10 psi	Truck only

PUSH-PULL STYLE

	Part No.	Delivery And Exhaust Ports	Mounting Hole	Pop Pressure	Application
	RKN20031	1/4 in.	3/4 in.	25 - 35 psi	Panel or bulkhead mount
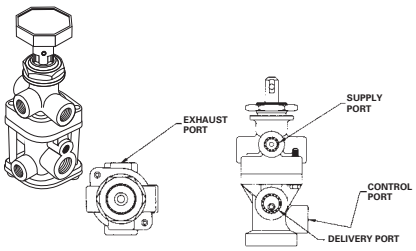	RKN20025	1/8-27 NPTF	7/8 in.	35 psi	With knob
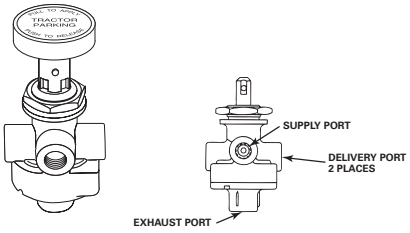	RKN20035	1/8-27 NPTF	7/8 in.	17.5 ± 12.5 psi	With knob
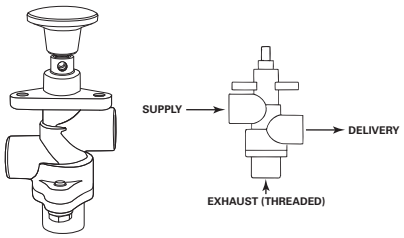	RKN20010	1/4 in.	3/4 in.	25/40 psi	With knob
	RKN20011	1/4 in.	3/4 in.	0 psi	Knob, plate and mounting screws are shipped loose

INVERSION VALVES

1-LINE

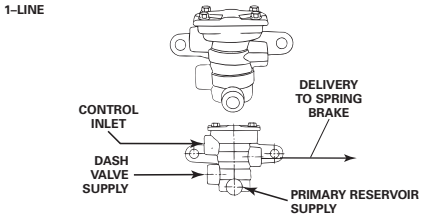

Part No.	Ports	Secondary Control Line	Primary Balance Line
RKN28030	1/4 in.	Yes	No
RKN28034	1/4 in.	Yes	No

2-LINE

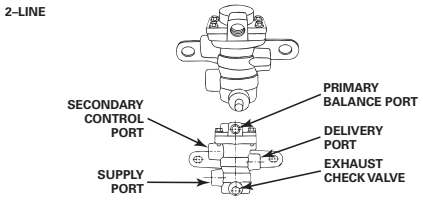

Part No.	Ports	Secondary Control Line	Primary Balance Line
RKN28032	1/4 in.	Yes	Yes

INVERSION RELAY

Part No.	Ports	Secondary Control Line	Primary Balance Line
971 899 152 0	N/A	N/A	

4

PRESSURE RELIEF VALVES

PRESSURE RELIEF VALVES

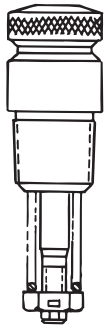

Body Style 1

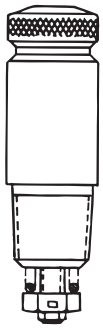

Body Style 2

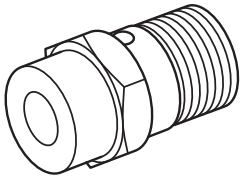

Body Style 3

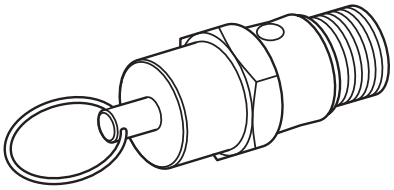

Body Style 4

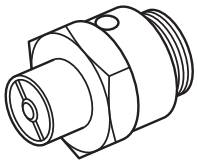

Body Style 5

Part No.	Pipe Thread Size	Body Style	PSI (Factory Set)
RKN31300	1/2	1	150
CKN31200	1/4 sealant	1	150
CKN31250	3/8 sealant	1	150
RKN31400	1/4	2	150
963 880 011 0	1/4	4	Compressor Application, 400°F
963 880 012 0	16 mm	5	150
RKN31528	1/4 sealant	3	170

QUICK RELEASE VALVES

QUICK RELEASE VALVES

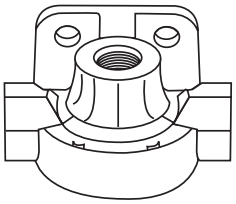

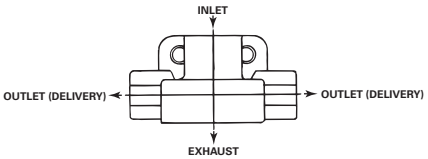

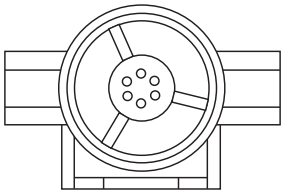

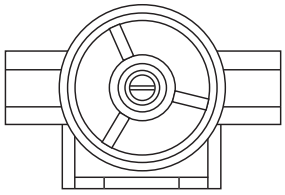

Part No.	Inlet Port	Outlet Delivery Ports	Differential PSI
RKN32060	3/8	3/8	6
WKN32011	1/2	3/8	0
RKN32005	3/8	3/8	0
RKN32006	3/8	3/8	3
WKN32003	1/2	3/8	3
WKN32050	1/2	3/8	6
RKN32014	1/2	1/2 PTC	0

PTC = Push-to-Connect fittings
90° = Elbow

4

QUICK RELEASE VALVES

QUICK RELEASE VALVES WITH TWO-WAY CHECK

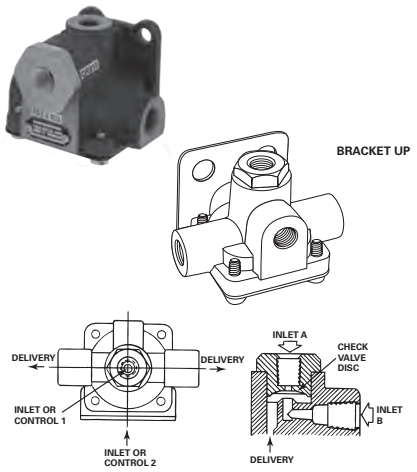

Part No.	Inlet Or Control		Delivery		Bracket Position
	1 — From Park Control Valve	2 — From Rear Axle Service Brake			
WKN32041	1/4	1/4	3/8	3/8	Up

IN-LINE

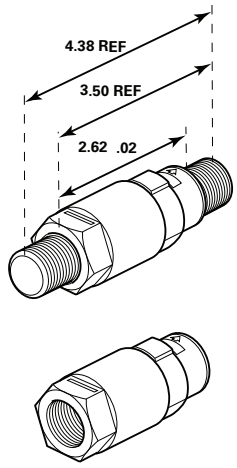

Style A

Part No.	Nipple Tractor Side	Vibra-Seal Tractor Side	Nipple Or Bushing Trailer Side	Vibra-Seal Trailer Side	Protective Screen	Valve Style
973 899 023 0	No	No	Yes	No	Yes	A
973 899 028 0	Yes	Yes	No	No	Yes	A

REGULATING VALVES

AIR REGULATING VALVES — ADJUSTABLE

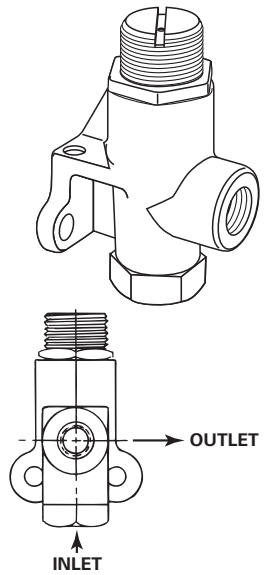

Style A

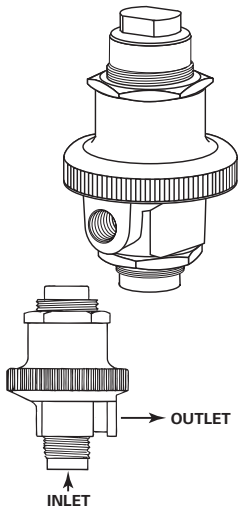

Style B

Part No.	Factory Pressure Setting (± 5 PSI)	Inlet	Outlet	Style
RKN31040	20 psi	1/4	1/4	A
RKN31050	45 psi	1/4	1/4	A
RKN31060	65 psi	1/4	1/4	A
RKN31041	50 psi	3/8	1/4	B

4

RELAY VALVES

BRACKET STYLES

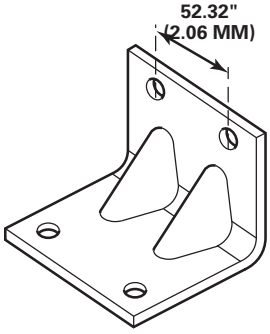

"A"

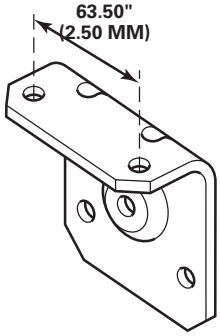

"B"

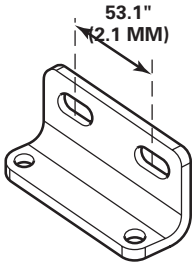

"C"

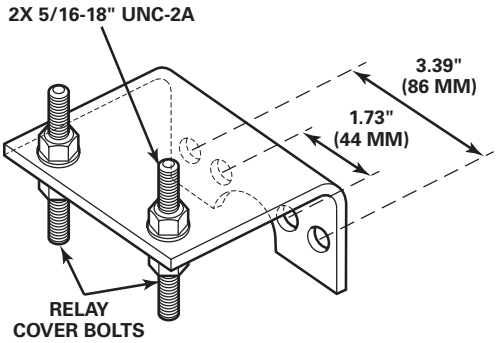

"D"

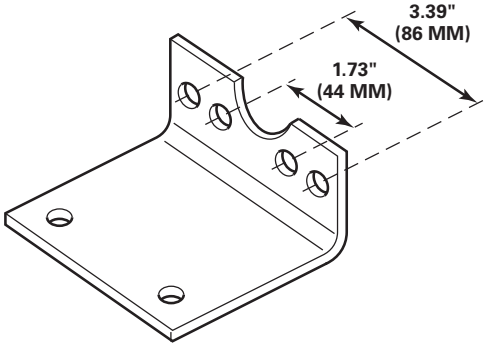

"E"

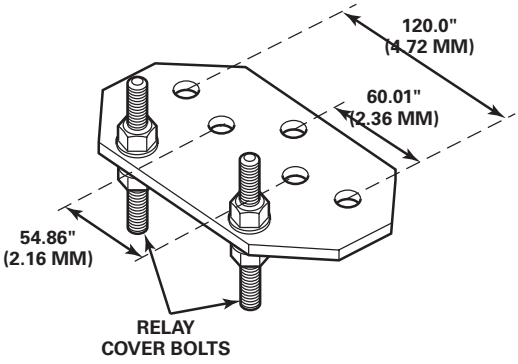

"F"

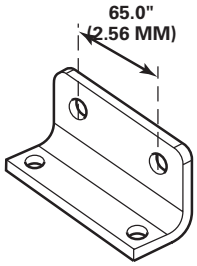

"G"

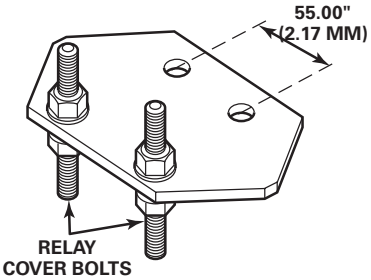

"H"

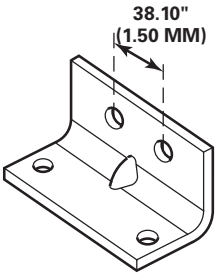

Style "I" may be bolted-on or cast.

"I"

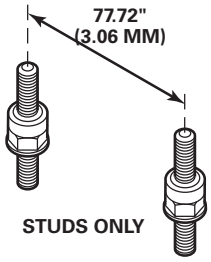

"J"

RELAY VALVES

RG-2

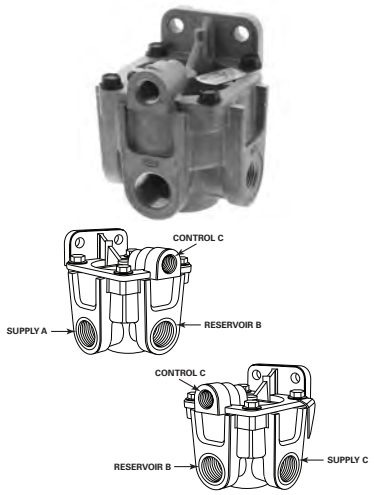

Part No.	Control A	Control B	Supply C	Supply D	Delivery E	Delivery F	Delivery G	Delivery H	Crack Pressure	Cover Position	Bracket Style
WKN28520	1/4		1/2	plug	1/2	1/2			6.0 psi	90°	I
WKN28500	1/4		3/8	3/8	3/8	3/8			6.0 psi	90°	I
WKN28510	1/4		1/2	plug	3/8	3/8			6.0 psi	90°	I

SERVICE

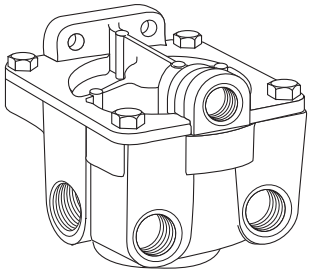

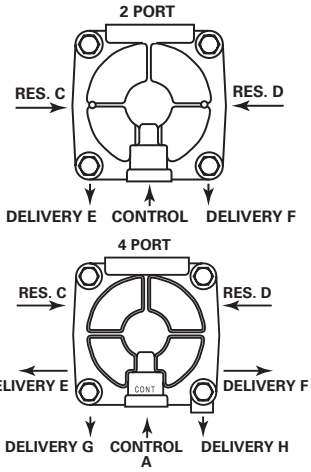

Part No.	Control A	Control B	Supply C	Supply D	Delivery E	Delivery F	Delivery G	Delivery H	Crack Pressure	Cover Position	Bracket Style
RKN28060	3/8		1/2	1/2	3/8	3/8			4.6 psi	0°	I
RKN28061	3/8		1/2	1/2	1/2	1/2			4.6 psi	0°	I
RKN28080	3/8		1/2	plug	3/8	3/8	3/8	3/8	7.0 psi	0°	I
RKN28300	3/8		1/2	1/2	1/2	1/2			0 psi	N/A	I
RKN28131	1/4		1/2	1/2	1/2	1/2			4.0 psi	270°	A
RKN28140	1/4		1/2	plug	1/2	1/2			4.6 psi	0°	B
RKN28132	3/8		1/2	1/2	1/2	1/2			7.0 psi	0°	I
RKN28042	1/4		1/2	1/2	1/2	1/2	1/2	1/2	4.6 psi	0°	D
RKN28067	1/4		1/2	1/2	1/2	1/2	1/2	1/2	4.6 psi	0°	E
RKN28085	1/4		1/2	1/2	1/2	1/2	1/2	1/2	4.6 psi	0°	G

RELAY VALVES

SERVICE WITH OPTIONAL TOP PORT CONTROL

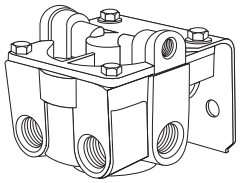

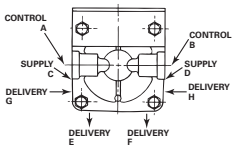

Part No.	Control A	Control B	Supply C	Supply D	Delivery E	Delivery F	Delivery G	Delivery H	Crack Pressure	Cover Position	Bracket Style
RKN28065	1/4	1/4	1/2	1/2	1/2	1/2			4.6 psi	90°/270°	B
RKN28140	1/4	1/4	plug	1/2	1/2	1/2			4.6 psi	270°	B

SERVICE WITH BIASED PRESSURE

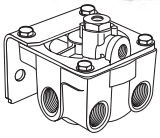

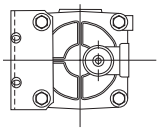

Part No.	Control A	Control B	Supply C	Supply D	Delivery E	Delivery F	Delivery G	Delivery H	Crack Pressure	Cover Position	Bracket Style
RKN28055	1/4	1/4	1/2	1/2	1/2	1/2	1/2	1/2	Primary control port 4.6 psi	0°	B
RKN28053	1/4	1/4	1/2	1/2	1/2	1/2	1/2	1/2	Secondary control port 9.6 psi	0°	G

SPRING WITH DOUBLE CHECK VALVE

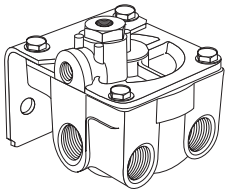

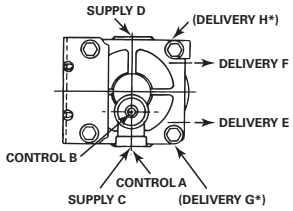

Part No.	Control A	Control B	Supply C	Supply D	Delivery E	Delivery F	Delivery G	Delivery H	Crack Pressure	Cover Position	Bracket Style
RKN28071	1/4	1/8	1/2	plug	1/2	1/2			4.6 psi	90°	B down
RKN28043	1/4	1/8	1/2	plug	1/2	1/2			4.6 psi	270°	B down
RKN28073	1/4	1/8	1/2	plug	1/2	1/2			4.6 psi	90°	E down
RKN28041	1/4	1/8	1/2	plug	1/2	1/2	1/2	1/2	4.6 psi	270°	B
RKN28069	1/4	1/4	1/2	1/2	3/8	3/8	3/8	3/8	4.6 psi	0°	G
RKN28063	1/4	1/4	1/2	1/2	3/8	3/8	3/8	3/8	4.6 psi	0°	C
RKN28140	1/4	1/8	1/2	1/2	1/2	1/2			4.6 psi	0°	I

TRACTOR PROTECTION VALVES

TRACTOR PROTECTION VALVES TWO-LINE

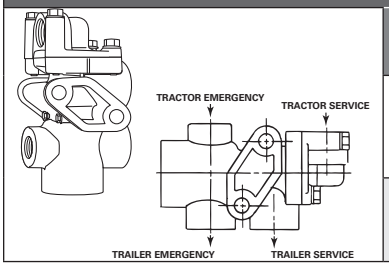

Part No.	Tractor Service	Tractor Emergency	Trailer Service	Trailer Emergency
RKN34061	3/8	1/4	1/2	1/2
RKN34060	3/8	1/4	1/2	1/2

PTC = Push-to-Connect fittings

TRACTOR PROTECTION VALVES TWO-LINE (MANIFOLD STYLE)

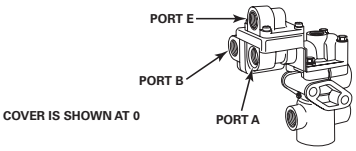

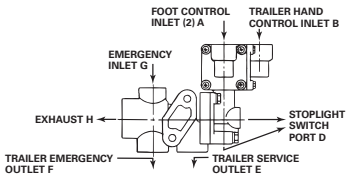

Part No.	Ports A	Ports B	Ports C	Ports D	Ports E	Ports F	Ports G	Exhaust Fittings (H)	Remarks	Cover Position
RKN34110	3/8	3/8	3/8	1/4	1/2	1/2	3/8	YES	TRAC. EM 3/8	0°
RKN34130	3/8	3/8	3/8	1/4	1/2	1/2	3/8	YES	N/A	180°
RKN34111	3/8	3/8	3/8	1/4	1/2	1/2	3/8	NO	N/A	0°
RKN34101	1/2 PTC	3/8 PTC	3/8 PTC	1/4	1/2	1/2	3/8 PTC	NO	N/A	0°

ACCESSORIES — ELECTRICAL

ELECTRO-PNEUMATIC SWITCHES

PARK BRAKE SWITCH

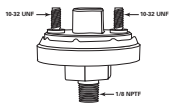

Part No.	Application
RBE13240	Actuates at 55 psi. Single pole, two terminal design. Circuit normally closed at 0 pressure.

Low Air Switch

Part No.	Application
RBE13241	Actuates at 70 ± 5 psi. Single pole, two terminal design. Circuit normally closed at 0 pressure. 12 volt or 24 volt

Service Circuit Stoplight Switch

Part No.	Application
RBE13250*	Actuates at 3-5 psi. Single pole, two terminal design. Circuit normally open at 0 pressure. Solid state contacts. Snap action design to increase switch life. Tested at one million cycles at 30 Amps. Pole size 1/4-8NPT

*with nuts

ACCESSORIES

BULKHEAD FITTING (FRAME NIPPLE)

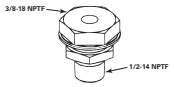

Part No.	Application
893 891 003 2	Frame Nipple

IN-LINE FILTERS

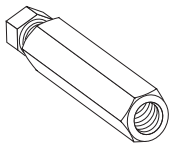

Part No.	Application
RKN31026	2 female ports (1/4 in. ports)
RKN31025	1 female port, 1 male port (1/4 in. ports)

ACCESSORIES

KNOBS

	Part No.	Application
	R102684A	Dash Control, 1/4-28 UNF, Black body
	RAD25079	Front Brake Limiting (wet road), 1/4-28 UNF, Yellow body
	R12503	Park, 1/4-20 UNF, Yellow body
	R12509	Park, 1/4-28 UNF, Black body

ACCESSORIES — TREADLES

ALUMINUM TREADLES

	Part No.	Pedal Angle	Application
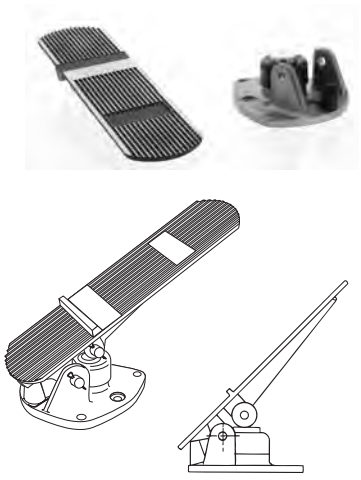	RSN4017E	34°	N/A
	RSN4017A	45°	N/A
	RSN4017F	27°	N/A
	RN21052	N/A	Treadle only. Mack application

ADDITIONAL VALVES AND PARTS

CONTROL VALVE		
	Part No.	Application
IMAGE NOT AVAILABLE AT TIME OF PRINTING	973 009 010 0	N/A

EMISSION VALVE			
	Part No.	Application	
	975 009 004 0	N/A	
	446 091 303 0	12	2/2

TABLE OF CONTENTS

TITLE **PAGE**

CLUTCH CONTROLS.....5-2

CLUTCH CONTROL SYSTEMS - OEM AND SERVICE PARTS

OEM Production Only				Service Parts Only					
Platform	Prior Gen CC System	Prior Gen CC System	Current Gen CC System	Pedal Unit	Hose	Slave Cylinder	Label	Pedal Pad	Brake Fluid
M2	N/	N/	400 030 004 0	965 001 103 0	452 698 011 0	970 051 503 0	899 201 601 4	897 730 050 4	830 503 059 4
	N/A	N/A	400 030 011 0		452 698 012 0				
	N/A	N/A	400 030 012 0	965 001 104 0					
	N/A	N/A	400 030 005 0		452 698 011 0				
	400 310 001 0	400 030 007 0	400 030 027 0	965 001 106 0	452 698 012 0				
	400 310 002 0	400 030 013 0	400 030 028 0		452 698 014 0				
	400 310 006 0	400 030 025 0	400 030 030 0	965 001 209 0					
	400 310 005 0	400 030 024 0	400 030 029 0		452 698 012 0				
P3	400 310 003 0	400 030 015 0	400 030 033 0	965 001 208 0					
	400 310 004 0	400 030 016 0	400 030 034 0		452 698 014 0				
Western Star	400 310 007 0	400 030 026 0	400 030 031 0	965 001 209 0	452 698 008 0				
	400 310 008 0	400 030 050 0	400 030 032 0		452 698 007 0				
	N/A	N/A	400 030 051 0	965 001 058 0	452 698 012 0				
M2	400 310 009 0	965 001 117 0	400 030 035 0	965 001 116 0	N/A	N/A	N/A	N/A	N/A

HOSES

Part No.	Description	Application
452 698 014 0	Hydraulic Hose	2.4 meters
400 611 015 0	Kit	2.2 meter hose with retaining ring
452 698 012 0	Hose	2.2 meter hose

HYDRAULIC CLUTCH PEDAL

Part No.	Application
965 001 106 0	Hydraulic Clutch Pedal unit for unsynchronized system without OCS

PEDAL ASSEMBLY

Part No.	Application
965 001 208 0	For unsynchronized system with OCS

REPAIR KIT

Part No.	Application
965 001 900 2	Repair kit for clutch pedal part numbers 965 001 103 0, 965 001 106 0, 965 001 208 0 & 965 001 209 0

CLUTCH SERVO

Part No.	Make	Application
970 051 510 0	Volvo	With air pressure assist
970 051 511 0	Navistar	With quick connect adapter
970 051 506 0	DTNA	With air pressure assist

SLAVE CYLINDER

Part No.	Make	Application
970 051 505 0	Volvo	Without quick connect adapter. Pushrod 99.1mm
970 051 509 0	Volvo	Without quick connect adapter. Pushrod 79mm
970 051 512 0	Navistar	With quick connect adapter
970 051 501 7	Volvo	Without quick connect adapter
970 051 503 0	Freightliner	With hose connector (without pushrod)

SLAVE CYLINDER

IMAGE NOT AVAILABLE AT TIME OF PRINTING	Part No.	Make	Application
	400 850 904 0	N/A	With hose connector & with 90 deg fitting

SWITCH KIT

IMAGE NOT AVAILABLE AT TIME OF PRINTING	Part No.	Application
	965 001 009 2	Repair kit for clutch pedal part numbers 965 001 103 0, 965 001 106 0, 965 001 208 0, 965 001 209 0 & 965 001 116 0

MECHANICAL CLUTCH PEDAL

	Part No.	Application
	965 001 116 0	For mechanical system with OCS

TABLE OF CONTENTS

TITLE **PAGE**

COMPRESSORS 6-2
REPAIR KITS 6-4

	Part No.	Model	New/Reman	Repair Kit	Cylinders
IMAGE NOT AVAILABLE AT TIME OF PRINTING	411 141 552 0	Various	New	N/A	Single Cylinder - 159cc
	912 125 000 0	N/A	New	N/A	Single Cylinder - 238cc

CATERPILLAR

	Part No.	Model	New/Reman	Repair Kit	Cylinders
	911 154 518 0	C3126, C7, C9	New	N/A	Single Cylinder - 250cc

MACK

	Part No.	WABCO Core No.	Model	New/Reman	Repair Kit	Cylinders
	911 153 055 R	911 153 055 9	ASET Applications	Reman	911 906 800 2	Single Cylinder for Thru Drive - 318cc
	911 515 008 7	911 515 005 9	ASET Applications	Service Exchange	N/A	Twin Cylinder - 636cc
	912 142 002 R	912 142 001 9	HDEP Applications	Reman	N/A	Single Cylinder - 318cc
	912 542 007 R	912 512 029 9	HDEP Applications	Reman	N/A	Twin Cylinder - 636cc

PACCAR

	Part No.	WABCO Core No.	Model	New/ Reman	Repair Kit	Cylinders
	912 518 105 7	912 518 108 9	MX-13	Service Exchange	N/A	Twin Cylinder - 636cc
	912 518 108 7	912 518 108 9	MX-13	Service Exchange	N/A	Twin Cylinder - 476cc
IMAGE NOT AVAILABLE AT TIME OF PRINTING	912 518 106 7	N/A	MX-11	Service Exchange	N/A	Twin Cylinder - 476cc
IMAGE NOT AVAILABLE AT TIME OF PRINTING	912 518 113 7	912 518 106 9	MX-11	Service Exchange	N/A	Twin Cylinder - 636cc
IMAGE NOT AVAILABLE AT TIME OF PRINTING	912 518 112 7	912 518 108 9	MX-13	Service Exchange	N/A	Twin Cylinder - 636cc

VOLVO

	Part No.	WABCO Core No.	Model	New/ Reman	Repair Kit	Cylinders
	412 704 008 0	N/A	D-12	New	N/A	Twin Cylinder - 704cc
	912 512 029 R	912 512 029 9	HDEP Applications	Reman	N/A	Twin Cylinder - 636cc
	912 512 033 0		HDEP Applications	New	912 512 940 2	2-cylinder clutch compressor - 636cc

CUMMINS

	Part No.	Cummins Part No.	Engine Application
IMAGES NOT AVAILABLE AT TIME OF PRINTING	911 153 019 R	4318220RX	OSX/ISX
	911 153 607 R	4318216RX	ISX
	911 153 608 R	4318214RX	ISM
	911 153 938 R	5301094RX	ISC
	911 153 939 R	5301094RX	ISC/ISL
	911 153 013 R	5301098RX	ISC HT/ISC
	911 153 003 R	5286966RX	ISB
	911 153 510 R	5286964RX	ISB
	911 153 014 R	5301082RX	ISB
	911 153 015 R	5301080RX	ISB
	911 153 515 R	5286968RX	ISB
	911 153 020 R	5301100RX	ISC/ISL
	911 153 021 R	4318218RX	ISX/Black

For purchasing Cummins compressors, contact your Cummins parts distribution center.

REPAIR KITS

	Part No.	Description	Application
IMAGE NOT AVAILABLE AT TIME OF PRINTING	912 518 927 2	Tube Repair Kit	PACCAR MX North America, ALL

TABLE OF CONTENTS

TITLE **PAGE**

ONGUARD® COLLISION MITIGATION UNITS 7-2
ONGUARD COLLISION MITIGATION DISPLAY UNITS 7-5
ONGUARD COLLISION MITIGATION REPAIR PARTS 7-5
ONLANE® DEPARTURE WARNING 7-7

ONGUARD®

Radar Sensor

Unit Radar Kit

OE	Model	Part Number	Description
Freightliner Kits* To replace Gen. 1 radars with Gen. 2	Cascadia with Cummins Engine	400 871 942 2	Manual Transmission
	Cascadia with Cummins Engine	400 871 943 2	AMT transmission
	Cascadia with Detroit 2010 Engine	400 871 940 2	Manual Transmission
	Cascadia with Detroit 2010 Engine	400 871 941 2	AMT Transmission
Freightliner	P3	400 850 846 0	OnGuard Display Unit for DTNA-Freightliner Vehicles
	Cascadia with Detroit 2013 Engine	400 871 014 0	Radar Sensor Unit - DTNA Manual Transmission
	Cascadia with Cummins Engine	400 871 015 0	Radar Sensor Unit - DTNA Manual Transmission
	Cascadia with Detroit 2013 Engine	400 871 024 0	Radar Sensor Unit - DTNA AMT Transmission
	Cascadia with Cummins Engine	400 871 025 0	Radar Sensor Unit - DTNA AMT Transmission
	Cascadia with Cummins 2013 Engine	400 871 031 0	Radar Sensor Unit - DTNA Allison Automatic
	Cascadia with Detroit 2010 Engine	400 871 045 0	Radar Sensor Unit - DTNA Manual Transmission
	Cascadia with Detroit 2010 Engine	400 871 046 0	Radar Sensor Unit - DTNA AMT Transmission
	Cascadia with Detroit2013 Engine	400 871 516 0	500Kbps Radar Sensor Unit - DTNA Manual Transmission
	Cascadia with Cummins Engine	400 871 517 0	500Kbps Radar Sensor Unit - DTNA Manual Transmission
	Cascadia with Detroit2013 Engine	400 871 526 0	500Kbps Radar Sensor Unit - DTNA AMT Transmission
	Cascadia with Cummins Engine	400 871 527 0	500Kbps Radar Sensor Unit - DTNA AMT Transmission
	Cascadia with Detroit 2013 Engine	400 871 536 0	500Kbps Radar Sensor Unit - DTNA Allison Automatic
	M2 with CUMMINS ISL with Compression Retarder	400 871 061 0	Radar Sensor Unit - Allison Automatic
	M2 with CUMMINS ISL + ISB with Exhaust Retarder	400 871 066 0	Radar Sensor Unit - Allison Automatic
	M2 with CUMMINS ISL with Compression Retarder	400 871 573 0	500Kbps Radar Sensor Unit - Allison Automatic
	M2 with CUMMINS ISL + ISB with Exhaust Retarder	400 871 574 0	500Kbps Radar Sensor Unit - Allison Automatic

*Does not retrofit OnGuard® to a vehicle that does not already have OnGuard®.

ONGUARD®

Radar Sensor Unit Radar Kit

OE	Model	Part Number	Description
Kenworth	T680 with MX Engine	400 871 254 0	Radar Sensor Unit - AMT Transmission
	T680 with MX Engine	400 871 255 0	Radar Sensor Unit - Manual Transmission
	T680 with Cummins Engine	400 871 256 0	Radar Sensor Unit - AMT Transmission
	T680 with Cummins Engine	400 871 257 0	Radar Sensor Unit - Manual Transmission
Navistar	ProStar MAXXFORCE	400 871 110 0	Radar Sensor Unit - Manual Transmission
	ProStar MAXXFORCE	400 871 120 0	Radar Sensor Unit - AMT Transmission
	ProStar CUMMINS	400 871 142 0	Radar Sensor Unit - Manual Transmission
	ProStar CUMMINS	400 871 152 0	Radar Sensor Unit - AMT Transmission
	ProStar	400 871 642 0	Radar Sensor Unit -500Kbps - Manual Transmission
	ProStar	400 871 650 0	Radar Sensor Unit -500Kbps - AMT Transmission
	ProStar	400 871 660 0	Radar Sensor Unit -500Kbps - Automatic Transmission
Navistar Kit* To replace Gen. 1 radars with Gen. 2	ProStar MAXXFORCE	400 871 945 2	Nav-1, 1-piece metal bumper
	ProStar MAXXFORCE	400 871 944 2	Nav-3, 1-piece metal bumper
	ProStar MAXXFORCE	400 870 840 0	Display Unit
Peterbilt	P587 with MX Engine	400 871 262 0	Radar Sensor Unit - AMT Transmission
	P587 with MX Engine	400 871 261 0	Radar Sensor Unit - Manual Transmission
	P587 with Cummins Engine	400 871 264 0	Radar Sensor Unit - AMT Transmission
	P587 with Cummins Engine	400 871 263 0	Radar Sensor Unit - Manual Transmission
	P579 with MX Engine	400 871 262 0	Radar Sensor Unit - AMT Transmission
	P579 with MX Engine	400 871 261 0	Radar Sensor Unit - Manual Transmission
	P587 with Cummins Engine	400 871 264 0	Radar Sensor Unit - AMT Transmission
	P587 with Cummins Engine	400 871 263 0	Radar Sensor Unit - Manual Transmission
Peterbilt Kits* To replace Gen. 1 radars with Gen. 2	587 with Cummins Engine	400 871 947 2	Radar Kit - Manual Transmission
	587 with Cummins Engine	400 871 948 2	Radar Kit - AMT transmission

*Does not retrofit OnGuard® to a vehicle that does not already have OnGuard®.

ONGUARD®

Radar Sensor

Unit Radar Kit

OE	Model	Part Number	Description
Western Star	Phantom - Detroit 2013 Engine	400 871 051 0	Radar Sensor Unit - Manual
	Phantom - Detroit 2013 Engine	400 871 056 0	Radar Sensor Unit - AMT
	Phantom - Detroit 2013 Engine	400 871 557 0	500Kbps Radar Sensor Unit - Manual
	Phantom - Detroit 2013 Engine	400 871 558 0	500Kbps Radar Sensor Unit - AMT
All Navistar and DTNA	All Models	400 871 850 0	Display, 500 Kbps
All Makes	All Models	400 878 200 0	Gen2 Radar Sensor Fascia - Connector Driver's Side
		400 878 201 0	Gen2 Radar Sensor Fascia - Connector Passenger's Side
		400 850 823 0	Gen1 Radar FASCIA, Radar Bracket
		400 850 824 0	Gen1 Radar ACC Front Mount

SENSOR COVERS AND BRACKETS

	Part No.	Application
	400 850 823 0	Top cover
	400 850 824 0	Bottom cover
	400 878 200 0	For the generation 2 radar sensor RH connector

ONGUARD® — UNITS AND PARTS

CABLES

	Part No.	Application
	400 850 811 0	Radar Chassis Stub, FL P3
	400 850 813 0	Stop Lamp relay Dash Overlay, FL P3
	400 877 001 0	Radar Harness

DISPLAY UNITS

DISPLAY UNIT

	Part No.	Application
	400 850 797 0	Driver Display
	400 870 840 0	Navistar MaxxForce
	400 850 846 0	DTNA Freightliner P3
	400 870 862 0	Driver Interface
	400 870 810 0	Peterbilt and Kenworth
	400 871 801 0	Navistar and DTNA all models, 250 Kbps
	400 871 850 0	Navistar and DTNA all models, 500 Kbps

REPAIR PARTS

ADJUSTER

	Part No.	Application
	400 850 796 2	Thru holes, ACC radar mount

SCREW ADJUSTER

	Part No.	Application
	400 850 798 4	Adjuster Screw for radar assembly

CLIP BALL SOCKET

	Part No.	Application
	895 821 511 4	Freightliner

ONLANE®

OE	Model	Part Number	Description
Freightliner	Cascadia	400 873 000 0	
	M2-106 with 160 LoPro	400 873 007 0	
	M2-106 with 280	400 873 021 0	
	M2-106 with 160 HiPro	400 873 024 0	
	Cascadia	400 873 008 0	LDW-Video Data Recording
	M2-106 with 160 LoPro	400 873 013 0	LDW-Video Data Recording
	M2-106 with 280	400 873 022 0	LDW-Video Data Recording
	M2-160 with 160 HiPro	400 873 025 0	LDW-Video Data Recording
	Cascadia	400 873 103 2	Aftermarket Kit
	M2-106 with 160 LoPro	400 873 105 2	Aftermarket Kit
	M2-106 with 280	400 873 117 2	Aftermarket Kit
	M2-106 with 160 HiPro	400 873 119 2	Aftermarket Kit
	Cascadia	400 873 109 2	Aftermarket Kit - Video Data Recorder
	M2-106 with 160 LoPro	400 873 114 2	Aftermarket Kit - Video Data Recorder
	M2-106 with 280	400 873 118 2	Aftermarket Kit - Video Data Recorder
	M2-106 with 160 HiPro	400 873 120 2	Aftermarket Kit - Video Data Recorder
Navistar	ProStar	400 873 002 0	Lane Departure Warning
		400 873 009 0	LDW-Video Data Recording
		400 873 104 2	Aftermarket Kit
		400 873 110 2	Aftermarket Kit - Video Data Recorder
Kenworth	T660/T800	400 873 004 0	Lane Departure Warning
	T700	400 873 005 0	Lane Departure Warning
	T680	400 873 006 0	Lane Departure Warning
	T660/T800	400 873 010 0	LDW-Video Data Recording
	T700	400 873 011 0	LDW-Video Data Recording
	T680	400 873 012 0	LDW-Video Data Recording
	T660/T800	400 873 106 2	Aftermarket Kit
	T700	400 873 107 2	Aftermarket Kit
	T680	400 873 108 2	Aftermarket Kit
	T660/T800	400 873 111 2	Aftermarket Kit - Video Data Recorder
	T700	400 873 112 2	Aftermarket Kit - Video Data Recorder
	T680	400 873 113 2	Aftermarket Kit - Video Data Recorder
Peterbilt	PB587	400 873 005 0	Lane Departure Warning
	PB579	400 873 006 0	Lane Departure Warning
	PB587	400 873 011 0	LDW-Video Data Recording
	PB579	400 873 012 0	LDW-Video Data Recording
	PB587	400 873 107 2	Aftermarket Kit
	PB579	400 873 108 2	Aftermarket Kit
	PB587	400 873 112 2	Aftermarket Kit - Video Data Recorder
	PB579	400 873 113 2	Aftermarket Kit - Video Data Recorder
Western Star	Phantom	400 873 019 0	Base
		400 873 020 0	Base + Video Recording
		400 873 115 2	Aftermarket Kit - Lane Departure Warning
		400 873 116 2	Aftermarket Kit - LDW with Video Data Recording
Brackets	Cascadia	400 873 100 0	Bracket
	All Other Vehicles	400 873 101 0	Bracket
	KW T700/PB587	400 873 102 0	Bracket

ONLANE® — LANE DEPARTURE WARNING

SAFETRAK 4

Part No.	Application
400 873 000 0	Freightliner/Cascadia
400 873 002 0	LDW Navistar / ProStar
400 873 004 0	LDW KW T660/T800
400 873 005 0	LDW KW T700/PB587
400 873 006 0	KW T680/PB579
400 873 008 0	VDR Freightliner/Cascadia
400 873 009 0	LDW/VDRNavistar/ProStar
400 873 010 0	VDR KWT660/800
400 873 011 0	VDR KWT
400 873 012 0	VDR KWT680/PB579-NGP VDR
400 873 020 0	VDR Western Star/Phantom

ONLANEALERT

OE	Model	Part No.	Description
PACCAR	PB579/567, T680/880	400 873 520 0	OnLaneALERT 10 deg Top Mount Camera
		400 873 521 0	
		400 873 522 0	
		400 873 523 0	
		400 873 524 0	
		400 873 525 0	
		400 873 526 0	
		400 873 527 0	
		400 873 528 0	
		446 070 402 0	

BRACKET ASSEMBLY

Part No.	Application
400 873 100 0	Cascadia
400 873 101 0	All Other Vehicles
400 873 102 0	KW T700/PB587

NOTES:

TABLE OF CONTENTS

TITLE **PAGE**

EBS TRACTOR AND TRAILER 8-2

RSS DIAGNOSTICS

Part No.	Application
446 301 030 0	USB Diagnostic Tool Requires TEBS-D Version 5.40 sofware For use only with RSS, not RSS Plus

SENSOR CAP

IMAGE NOT AVAILABLE
AT TIME OF PRINTING

Part No.	Application
441 032 043 4	ECU Sensor Protective Cap

8

RSS DIAGNOSTICS

Part No.	Application
446 301 030 0	Use with RSS only, not RSS Plus. Use both interface and cable. RSS software is S246 301 542 0 (RSS Plus uses TOOLBOX PLUS™). Trailer EBS diagnostic interface for serial ports on PC.

TUBE RELEASE TOOL

IMAGE NOT AVAILABLE
AT TIME OF PRINTING

Part No.	Application
899 700 920 2	European (DIN) push to connect pneumatic tube extractor tool.

TABLE OF CONTENTS

TITLE **PAGE**

OPTIRIDE® (ECAS TRUCK & BUS) 9-2

VALVE ASSEMBLY

Part No.	Volt	Application
400 652 043 0	12	BNC BRK/Volvo Assembly

ECU

Part No.	Volt	Application
400 850 924 0	12	Truck
400 850 924 0	N/A	DTNA

HARNESS

Part No.	Application
400 850 916 0	Chassis Switch System Cab Harness Frame Harness

Part No.	Application
400 850 918 0	Chassis Switch System Cab Harness

TABLE OF CONTENTS

TITLE **PAGE**

RETROFIT KITS 10-2

ONSIDE® BLIND SPOT DETECTION

Part No.	Application
400 874 013 2	DTNA P3 Cascadia Day Fairing Mount, 500k
400 874 014 2	DTNA P3 Cascadia Day Fairing Mount, 250k

ONGUARDACTIVE®

Part No.	Application
400 871 340 2	DTNA P3 Cascadia, with Detroit engine, manual transmission and 250kBaud communication, 2013 emmisions
400 871 341 2	DTNA P3 Cascadia, with Cummins engine, manual transmission and 250kBaud communication, 2013 emmisions

ONLANE® LANE DEPARTURE WARNING - 250kBaud

Part No.	Application
400 873 109 2	DTNA Cascadia, Camera with video
400 873 103 2	DTNA Cascadia, Camera without video
400 873 118 2	DTNA M2, Camera with video
400 873 117 2	DTNA M2, Camera without video
400 873 114 2	DTNA M2, Low profile, Camera with video
400 873 105 2	DTNA M2, Low profile, Camera without video
400 873 120 2	DTNA M2, High profile, Camera with video
400 873 119 2	DTNA M2, High profile, Camera without video
400 873 116 2	DTNA Western Star Phantom, Camera with video
400 873 115 2	DTNA Western Star Phantom, Camera without video
400 873 110 2	Navistar Prostar, Camera with video
400 873 104 2	Navistar Prostar, Camera without video
400 873 111 2	Kenworth T660/T800, Camera with video
400 873 106 2	Kenworth T660/T800, Camera without video
400 873 113 2	Kenworth T680, Peterbilt 579 NG, Camera with video
400 873 108 2	Kenworth T680, Peterbilt 579 NG, Camera without video
400 873 112 2	Kenworth T700, Peterbilt 587, Camera with video

DUMP BOX POSITION SENSOR

Part No.	Application
400 850 971 2	For use with Enhanced Easy-Stop Trailer ABS
400 850 970 2	For use with Roll Stability Support (RSS)

Prior to purchasing WABCO retrofit kits, please contact the WABCO Customer Care Center at 855-228-3203 or wnacustomercare@wabco-auto.com to ensure the vehicle meets the requirements for retrofit.

ROLL STABILITY SUPPORT (RSS) 2M

Part No.	Application
400 612 029 0	Air Ride 4S/2M for 2S/1M WABCO ABS Trailer
400 612 030 0	Air Ride 4S/2M for 2S/1M non-WABCO ABS Trailer
400 612 031 0	Air Ride 4S/2M unit, WABCO ABS-Equipped Trailer
400 612 032 0	Air Ride 2S/2M for 2S/1M non-WABCO ABS Trailer
400 612 033 0	Spring Ride 4S/2M for 2S/1M WABCO ABS Trailer
400 612 034 0	Spring Ride 4S/2M for 2S/1M non-WABCO ABS Trailer
400 612 044 0	Spring Ride 4S/2M for 4S/2M non-WABCO ABS Trailer
400 612 045 0	Spring Ride 2S/2M for 2S/1M WABCO ABS Trailer
400 612 046 0	Spring Ride 2S/2M for 2S/1M non-WABCO ABS Trailer

ENHANCED EASY-STOP® TRAILER ABS

Part No.	Application
400 612 000 0	Power Adapter Retrofit Kit, 2S/1M for Trailers, Easy-Stop ECU/Valve 472 500 021 0
400 612 001 0	Power/Diagnostic Adapter Retrofit Kit, 2S/1M for Trailers, Easy-Stop ECU/Valve 472 500 021 0
400 612 012 0	Power Adapter Retrofit Kit, 2S/1M for Dollies, Easy-Stop ECU/Valve 472 500 011 0
400 612 013 0	Power/Diagnostic Adapter Retrofit Kit, 2S/1M for Dollies, Easy-Stop ECU/Valve 472 500 011 0
400 612 010 0	Power Adapter Retrofit Kit, 2S/1M, 2M/2M, 4S/2M; Easy-Stop ECU/Valve 472 500 012 0*
400 612 011 0	Power/Diagnostic Adapter Retrofit Kit, 2S/1M, 2M/2M, 4S/2M; Easy-Stop ECU/Valve 472 500 012 0
400 612 003 0	Power Adapter Retrofit Kit, 4S/3M, Easy-Stop ECU/Valve 472 500 013 0
400 612 002 0	Power/Diagnostic Adapter Retrofit Kit, 4S/3M, Easy-Stop ECU/Valve 472 500 013 0

Prior to purchasing WABCO retrofit kits, please contact the WABCO Customer Care Center at 855-228-3203 or wnacustomercare@wabco-auto.com to ensure the vehicle meets the requirements for retrofit.

NOTES:

TABLE OF CONTENTS

TITLE **PAGE**

TOOLBOX PLUS™ DIAGNOSTIC SOFTWARE..... 11-2

TOOLBOX PLUS™ DIAGNOSTIC SOFTWARE

TOOLBOX PLUS™, the latest version of WABCO TOOLBOX PLUS™ software, helps expedite vehicle and trailer diagnosis and minimize downtime. The PC-based advanced diagnostic software features a redesigned homepage interface, expanded diagnostic capabilities and support for the WABCO product portfolio—including latest product releases Intelligent Anti-lock Braking System (iABS™) for trailers, Modular Braking System Platform (mBSP™) for trucks and TailGUARD™ reversing collision avoidance system for trucks and trailers.

To expedite diagnostics, TOOLBOX PLUS™ has a “roll call” feature that automatically detects and populates WABCO systems included on the vehicle. With a simple click, users can diagnose fault codes, view repair and installation instructions and access maintenance manuals. When further technical support is required, the software pre-populates the WABCO product warranty form with key information such as the vehicle identification number (VIN) and fault code(s), saving the user time. The form can then simply be emailed to the WABCO Customer Care Center.

In addition to these newest features provided, TOOLBOX PLUS™ provides the same great features users have come to expect:

- Displays both static and dynamic information from the system under test, as well as both active and stored system faults
- Activates components to verify system integrity and correct component operation and installation wiring
- Provides access to repair documents, maintenance manuals and installation instructions
- Provides reverse Diagnostic Trouble Code (DTC) lookup
- Enables Aftermarket Programming for most pneumatic and hydraulic ABS ECUs and OnLaneALERT® Lane Departure Warning camera
- Includes J1939 Bus Monitor for 500k Baud

For a detailed list of TOOLBOX PLUS™ diagnostic capabilities, visit https://www.wabco-auto.com/americas_en/Services-and-Support/Toolbox.

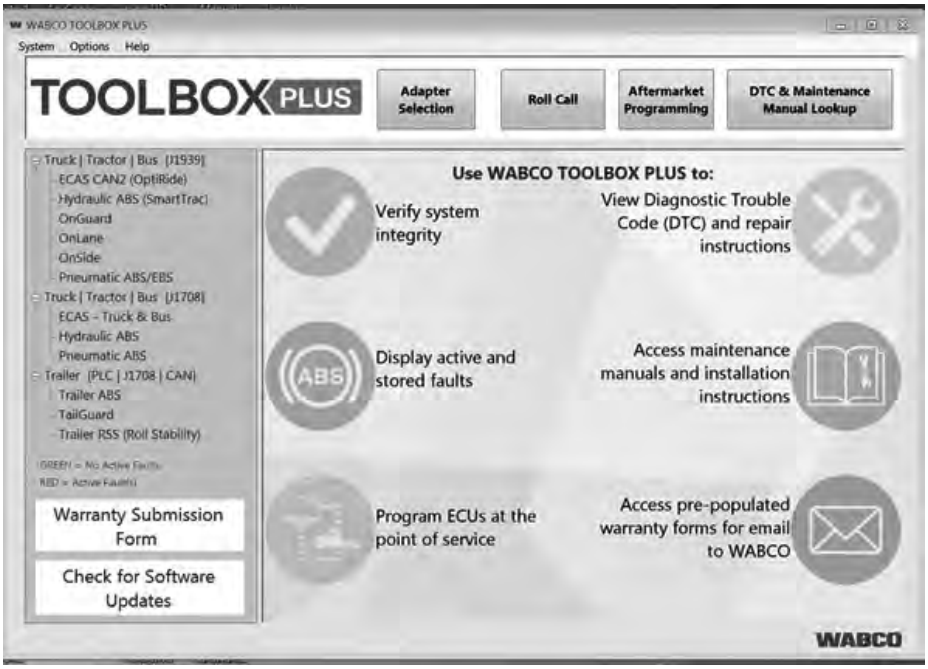

TABLE OF CONTENTS

TITLE **PAGE**

AIR DISC BRAKES 12-2
HYDRAULIC BRAKES 12-12
DRUM BRAKES 12-15
BRAKE CHAMBERS 12-21
AUTOMATIC SLACK ADJUSTERS 12-30

AIR DISC BRAKES

PAN® RANGE

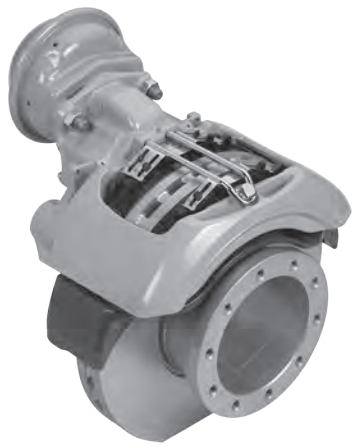

Technical Data	PAN®17	PAN® 19	PAN® 22	PAN® 25
Braking torque	10,000 Nm / 7,400 ft lbs	17,000 Nm / 12,500 ft lbs	Truck: 23,000 Nm / 17,000 ft lbs Trailer: 21,000 Nm / 15,500 ft lbs	25,000 Nm / 18,400 ft lbs
Disc dimension	330×34 mm / 13×1.3 in	375×45 mm / 14.8×1.8 in	430×45 mm / 17×1.8 in	525×41 mm / 20.7×1.6 in
Pad surface area	240 cm^2 / 37 in^2	292 cm^2 / 45 in^2	340 cm^2 / 53 in^2	340 cm^2 / 53 in^2
Pad thickness	19 mm / 0.75 in	21 mm / 0.83 in	23 mm / 0.91 in	23 mm / 0.91 in
Weight (incl. pads)	23 kg / 51 lb	32 kg / 71 lb	36 kg / 79 lb	39 kg / 86 lb
Rim size	17.5 in	19.5 in & 22.5 in	22.5 in	25 in
Max. actuator size	Type 20	Type 24	Type 24	Type 24

AIR DISC BRAKES

PAN® 17

Brake Pad Formula	Application	Service Part	Part No.	OE Production No.	Comments
Jurid 539-20	IMT	Brake w/o pads	40 175 072 40 175 073	Left hand brake: 40 175 090 Right hand brake: 40 175 091	Left hand brake Right hand brake
		Brake pad kit	12 999 806		1, 2, 3, 4, 5
		Seals and guide bolt	12 999 699VT		5, 7, 8, 9, 10, 11, 12, 13, 14
		Seals for clamping unit	640 175 920 2		5, 6, 14
		Pressure plate	640 175 940 2		15

Changing out the bolt kits requires tool set 640 195 522 2 and 640 175 521 2 (page 12-12).

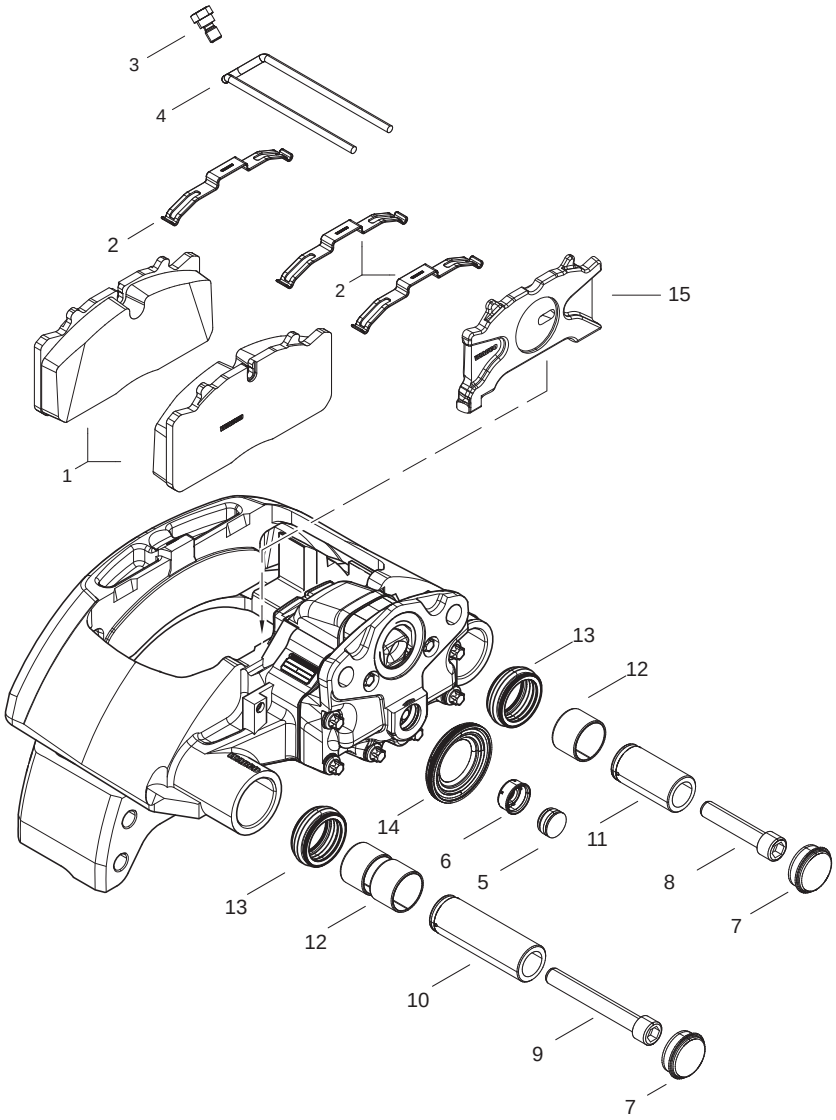

AIR DISC BRAKES

PAN® 19

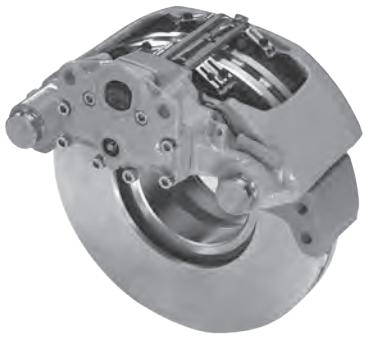

Brake Pad Formula	Application	Service Part	Part No.	OE Production No.	Comments
Jurid 539-20	IMT	Brake w/o pads	40 195 037 40 195 038	Left hand brake: 40 195 027 Right hand brake: 40 195 028	Left hand brake Right hand brake
		Brake pad kit	12 999 737 - IMT 640 195 933 2 - Hedrickson		2, 3, 6, 7, 10
		Seals and guide bolt	640 225 921 2		8, 10, 11, 12, 13, 14, 15, 16, 17, 18
		Seals for clamping unit	640 175 920 2		8, 9, 10
		Pressure plate	640 195 936 2		19

Changing out the bolt kits requires tool set 640 195 522 2 and 640 195 521 2 (page 12-12).

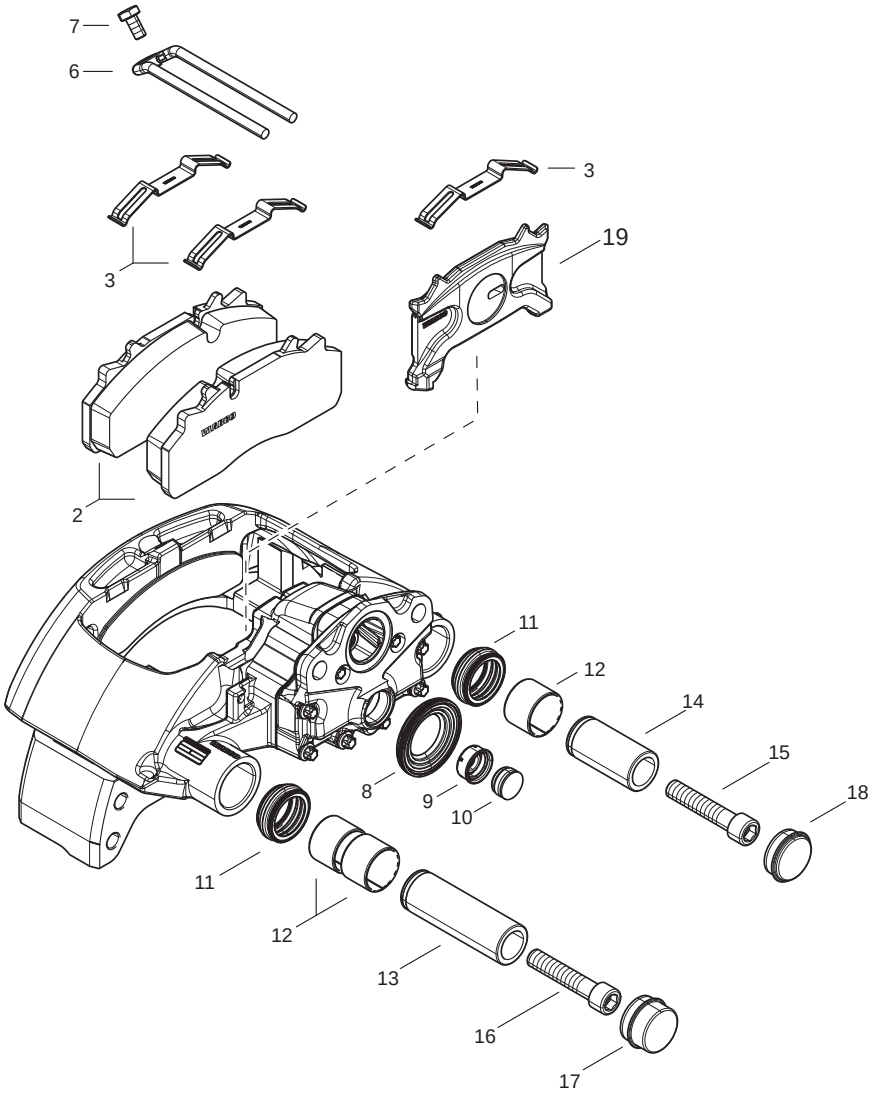

AIR DISC BRAKES

PAN® 22

Brake Pad Formula	Application	Service Part	Part No.	Series Part No.	Comments
WABCO 230	Hendrickson, Meritor	Brake w/o pads	640 225 080 0 640 225 081 0	Left hand brake: 640 225 036 0 Right hand brake: 640 225 037 0	Left hand brake Right hand brake
		Brake pad kit	640 225 922 2		2, 3, 4, 5, 8
		Seals and guide bolt	640 225 921 2		6, 8, 9, 10, 11, 12, 13, 14, 15, 16
		Steel covers	640 225 930 2		10, 11
		Seals for clamping unit	640 175 920 2		14, 15, 16
		Pressure plate	640 225 926 2		17

Changing out the bolt kits requires tool set 640 195 522 2 and 640 195 521 2 (page 12-12).
Note: 64MM Bolt Pattern.

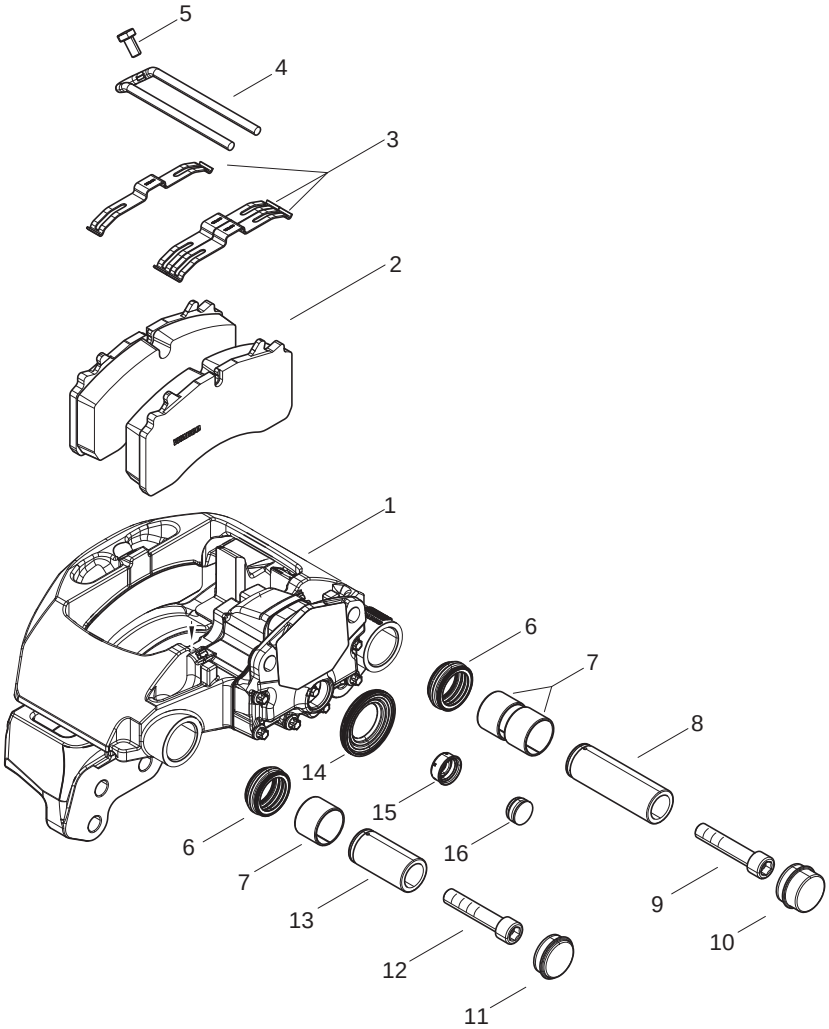

AIR DISC BRAKES

PAN® 22

Brake Pad Formula	Application	Service Part	Part No.	Series Part No.	Comments
Jurid 539-20	Ridewell, AXN, Reyco Graning, IMT	Brake w/o pads	40 225 015 40 225 016	Left hand brake: 40 225 011 Right hand brake: 40 225 012	Left hand brake Right hand brake
		Brake pad kit	12 999 796		1, 2, 3, 4, 5
		Seals and guide bolt	640 225 921 2		5, 7, 8, 9, 10, 11, 12, 13, 14, 15
		Seals for clamping unit	640 175 920 2		5, 6, 7
		Steel covers	640 225 930 2		14, 15
		Pressure plate	640 225 926 2		17

Changing out the bolt kits requires tool set 640 195 522 2 and 640 195 521 2 (page 12-12).
Note: 84MM Bolt Pattern.

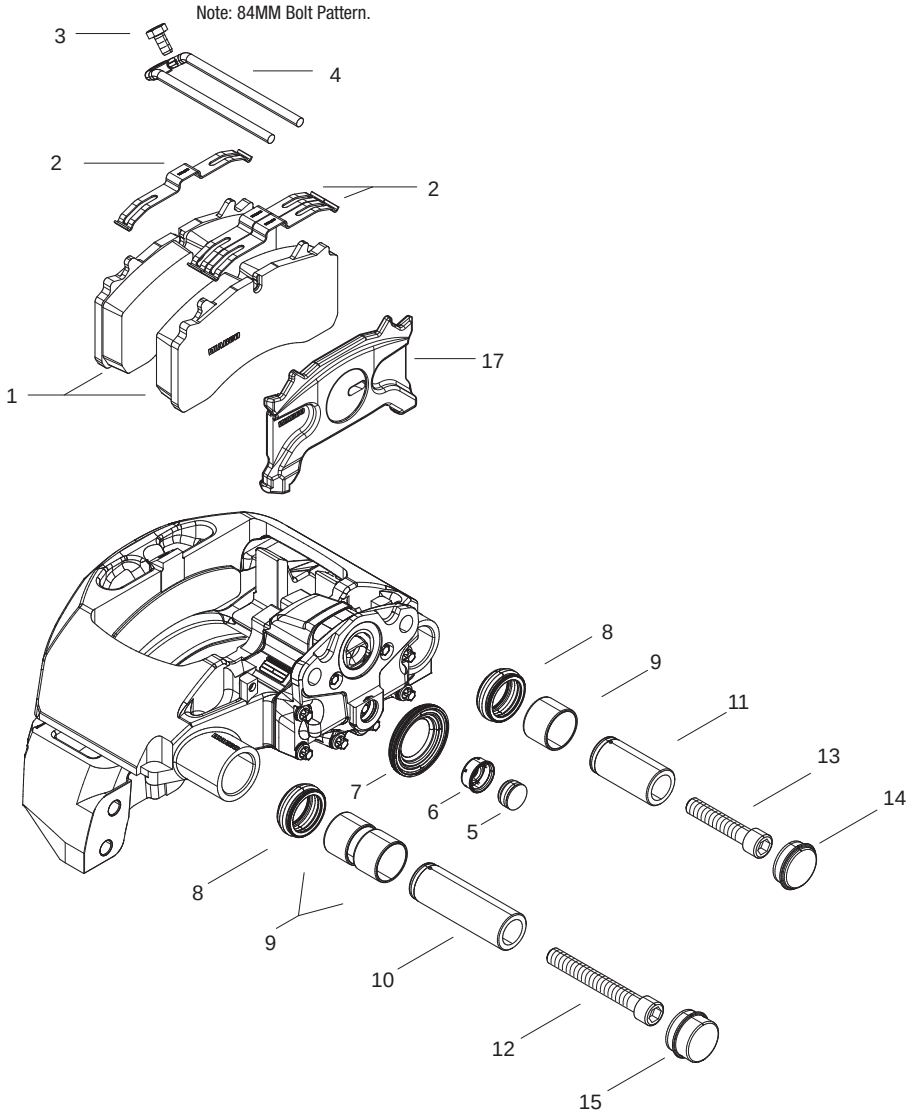

AIR DISC BRAKES

PAN® 25

Application	Service Part	Part No.	Series Part No.	Comments
Mainly in big and special use vehicles like cranes, fire trucks, tractors or military vehicles.	Brake pad kit	640 250 921 2	Left hand brake: 640 250 004 0 Right hand brake: 640 250 005 0	1, 2, 3, 4, 5, 6
	Seals and guide bolt	12 999 738VT		6, 7, 8, 9, 10, 11, 12, 13, 14, 15
	Seals for clamping unit	640 175 920 2		6, 7, 8
	Steel covers	640 225 931 2		10, 11

Changing out the bolt kits requires tool set 640 195 522 2 and 640 195 521 2 (page 12-12).

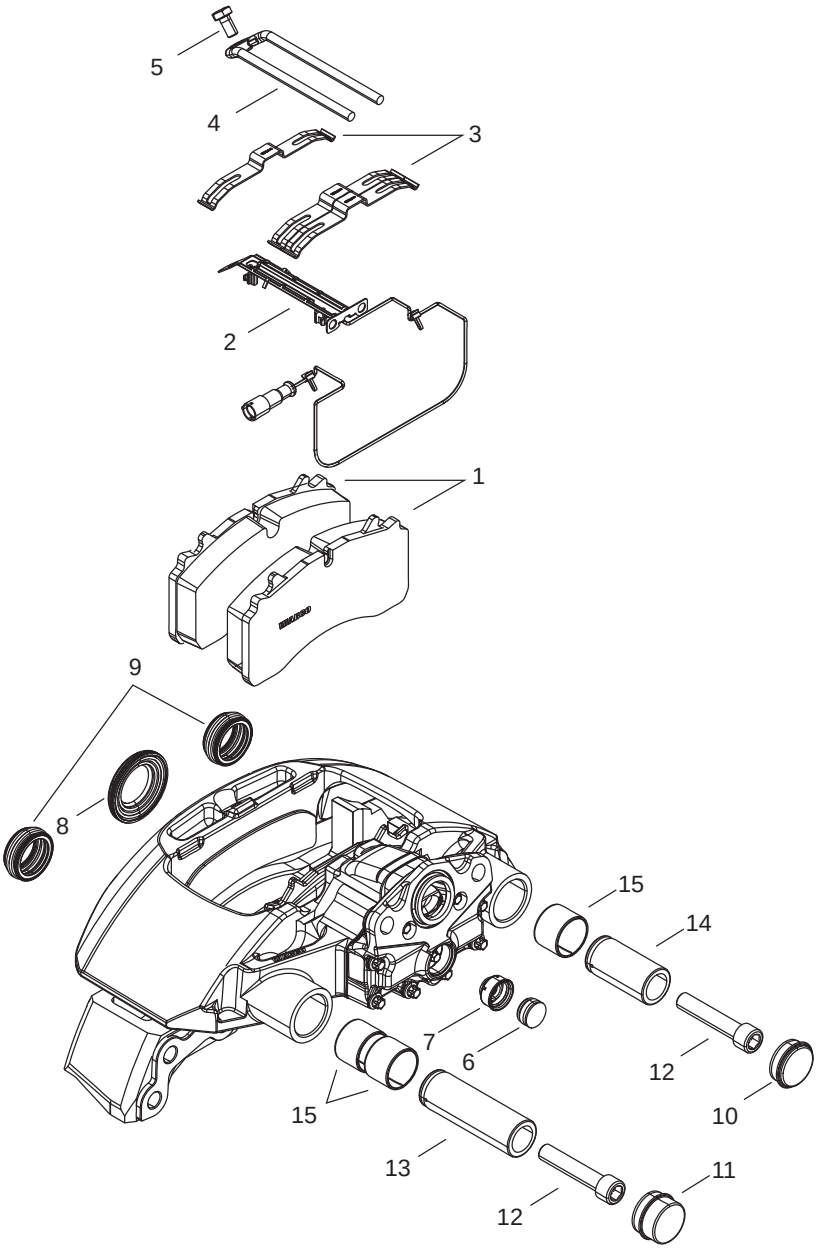

AIR DISC BRAKES

MAXX™ RANGE		
Technical Data	**MAXXUS™**	**MAXX22T™**
Braking torque / performance	23,000 Nm / 17,000 ft lbs	21.000 Nm / 15,500 ft lbs
Disc dimensions	430×45 mm / 16.93×1.77 in	430×45 mm / 16.93×1.77 in
Pad surface area	340 cm^2 / 52.7 in^2	340 cm^2 / 52.7 in^2
Pad thickness	21 mm / 0.83 in	23 mm / 0.91 in
Weight (incl. pads)	37 kg / 82 lb	32 kg / 71 lb
Rim size	22.5 in	22,5" / 22.5 in
Maximum actuator size	Type 24	Type 22

AIR DISC BRAKES

MAXXUS™

Brake Pad Formula	Application	Service Part	Part No.	Series Production No.	Comments
Jurid 539-20	Freightliner, Western Star	Brake w/o pads	640 322 065 0 640 322 066 0	Left hand brake: 640 322 050 0 Right hand brake: 640 322 051 0	Left hand brake Right hand brake
		Brake pads kit	640 322 934 2		3, 4, 5, 6, 17
		Seal set	640 322 932 2		7, 8
		Resetting unit	640 322 927 2		14, 15, 16, 17
		Pressure plate	640 322 935 2		2
		Seals and guide bolt	640 322 938 2		7, 8, 9, 10, 11, 12, 13, 17

Changing out the bolt kits requires tool set 640 195 522 2 and 640 322 522 2 (page 12-12).
Note: Radial mount.

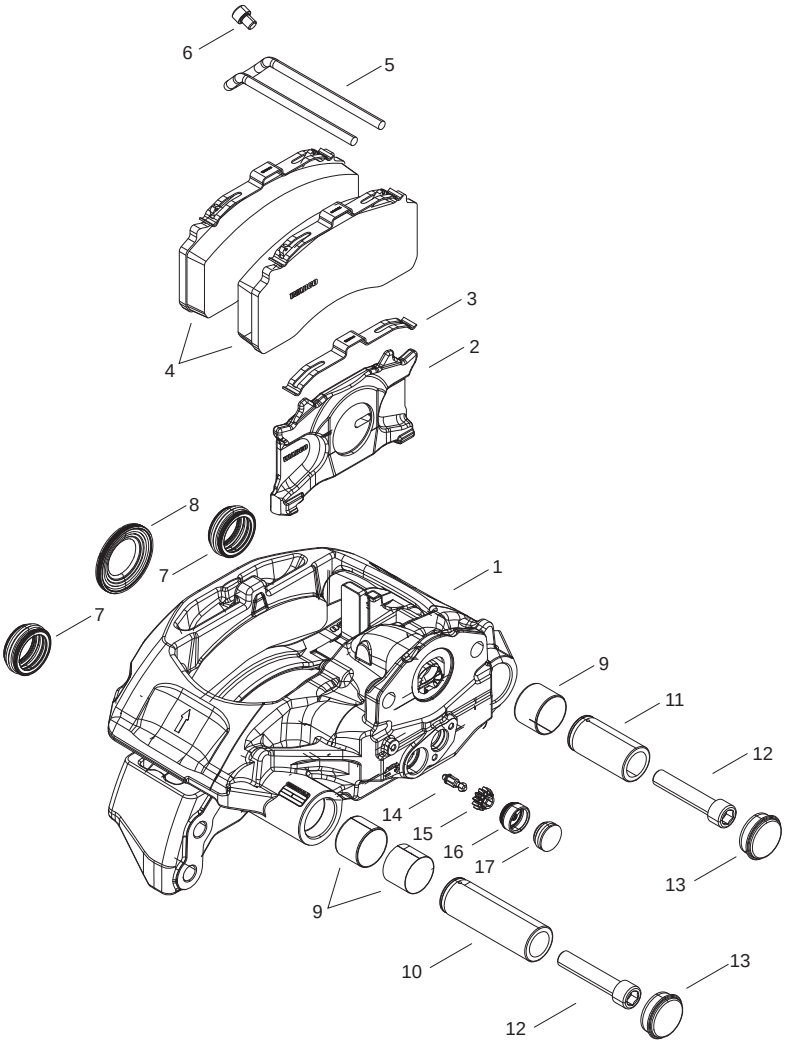

AIR DISC BRAKES

MAXX22T™

Brake Pad Formula	Application	Service Part	Part No.	Series Production No.	Comments
WABCO 230	Trailer	Brake w/o pads	640 222 007 0 640 222 008 0	Left hand brake: 640 222 005 0 Right hand brake: 640 222 006 0	Left hand brake Right hand brake
		Brake pads kit	640 222 927 2		8, 11, 12, 13, 16
		Seals and guide bolt	640 222 928 2		2, 3, 4, 5, 6, 7, 8, 10
		Seals for clamping unit	640 175 920 2		8, 9, 10
		Pressure plate	640 225 926 2		17

Changing out the bolt kits requires tool set 640 195 522 2 and 640 322 522 2 (page12-12).

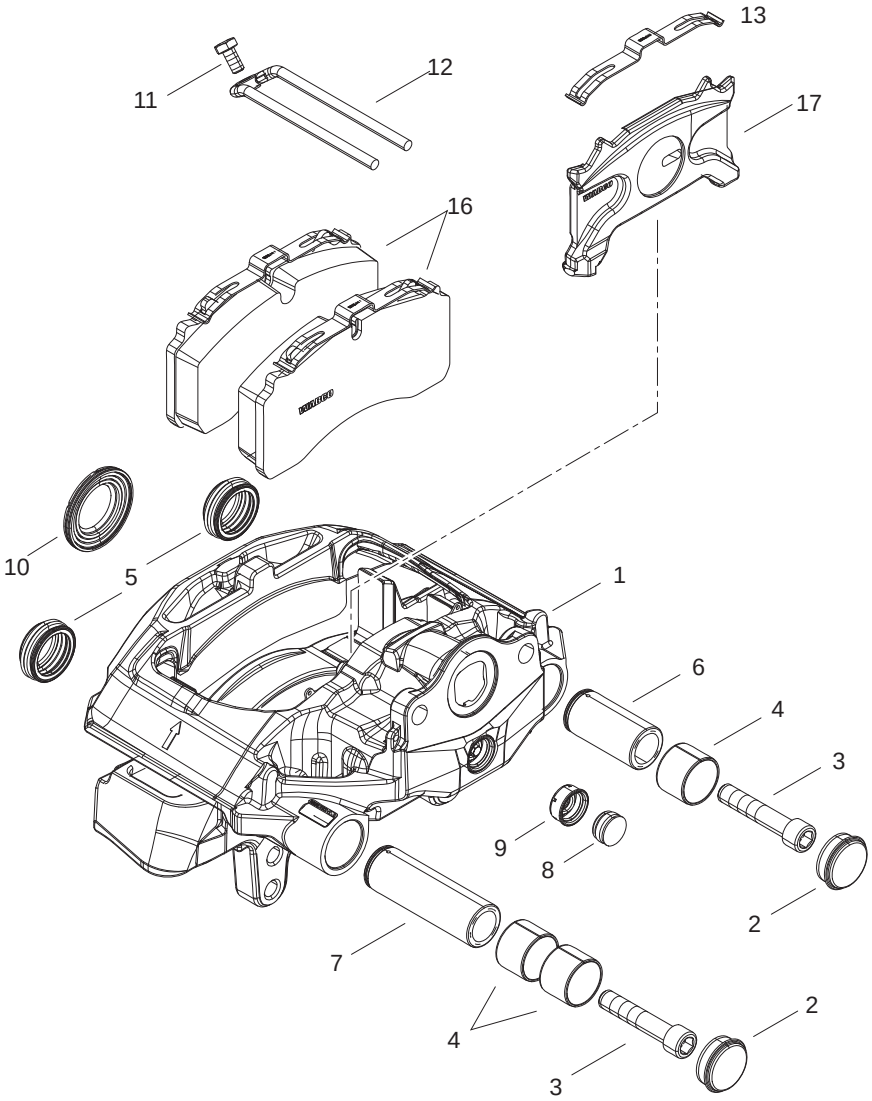

The WABCO caliper tool sets are modular tool sets for repairing WABCO calipers and adjusting the return units of truck or trailers. WABCO has designed a dedicated cranked ratchet wrench specifically to carry out this often difficult task. The tools will work with a wide range of OEM equipment, including (but not limited to) Daimler, Mercedes, MAN and Schmitz.

The WABCO caliper tool sets can be used for:

- Full servicing of PAN®17, 19, 22 and 25 brake calipers
- Full servicing of MAXXUS™ and MAXX™ brake calipers

BASIC TOOL SET 640 195 522 2

#10 #11 #12 #13

TOOL SET 640 175 521 2 FOR PAN®17

#14 #15 #16 #17 #18 #19 #20

TOOL SET 640 195 521 2 FOR PAN®19, PAN®22, PAN®25

#21 #22 #25 #26 #27 #28

TOOL SET 640 322 522 2 FOR MAXXUS™, MAXX22T™

#19 #20 #21 #22 #23

#24 #25 #26 #27 #29

HYDRAULIC BRAKES

230 VI OE – FLOATING CALIPER DISC BRAKE WITH MAGNET

Service Part	Part No.	Item No.
Brake	40 023 005	
Repair kit	12 999 473VT	30
Screw	18 429 151	1
Cover	13 230 075	2
Screw	18 425 475	5
Nut	18 441 009	6
Ring	13 701 115	7
Set of dished plate springs	12 303 003	8
Piston	13 477 053	9
Thrust piece	13 229 167	13
Magnet	17 861 001	16
Tolerance ring	17 665 107	17
Screw	18 429 469	18
Brake pad	12 182 091	19
Bleeding valve	16 200 083	22
Nut	18 444 000	24
Bleeding valve	16 200 152	40

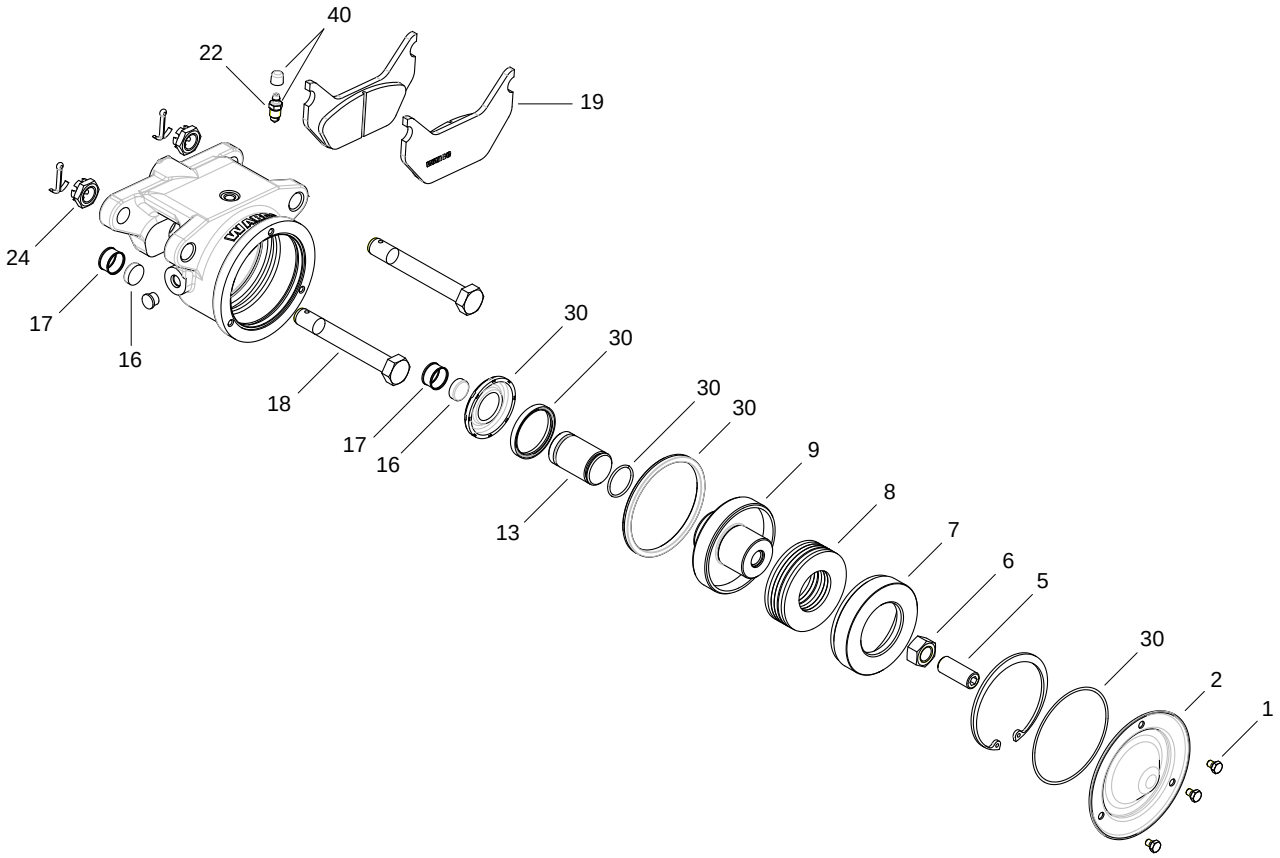

HYDRAULIC BRAKES

230 VI OE – FLOATING CALIPER DISC BRAKE

Service Part	Part No.	Item No.
Brake	40 023 004	
Repair kit	12 999 387VT	30
Screw	18 429 151	1
Cover	13 230 075	2
Screw	18 425 475	5
Nut	18 441 009	6
Ring	13 701 115	7
Set of dished plate springs	12 303 003	8
Piston	13 477 053	9
Thrust piece	13 229 146	11
Screw	18 429 469	15
Brake pad	12 182 091	16
Bleeding valve	16 200 083	19
Nut	18 444 000	21
Bleeding valve	16 200 152	40

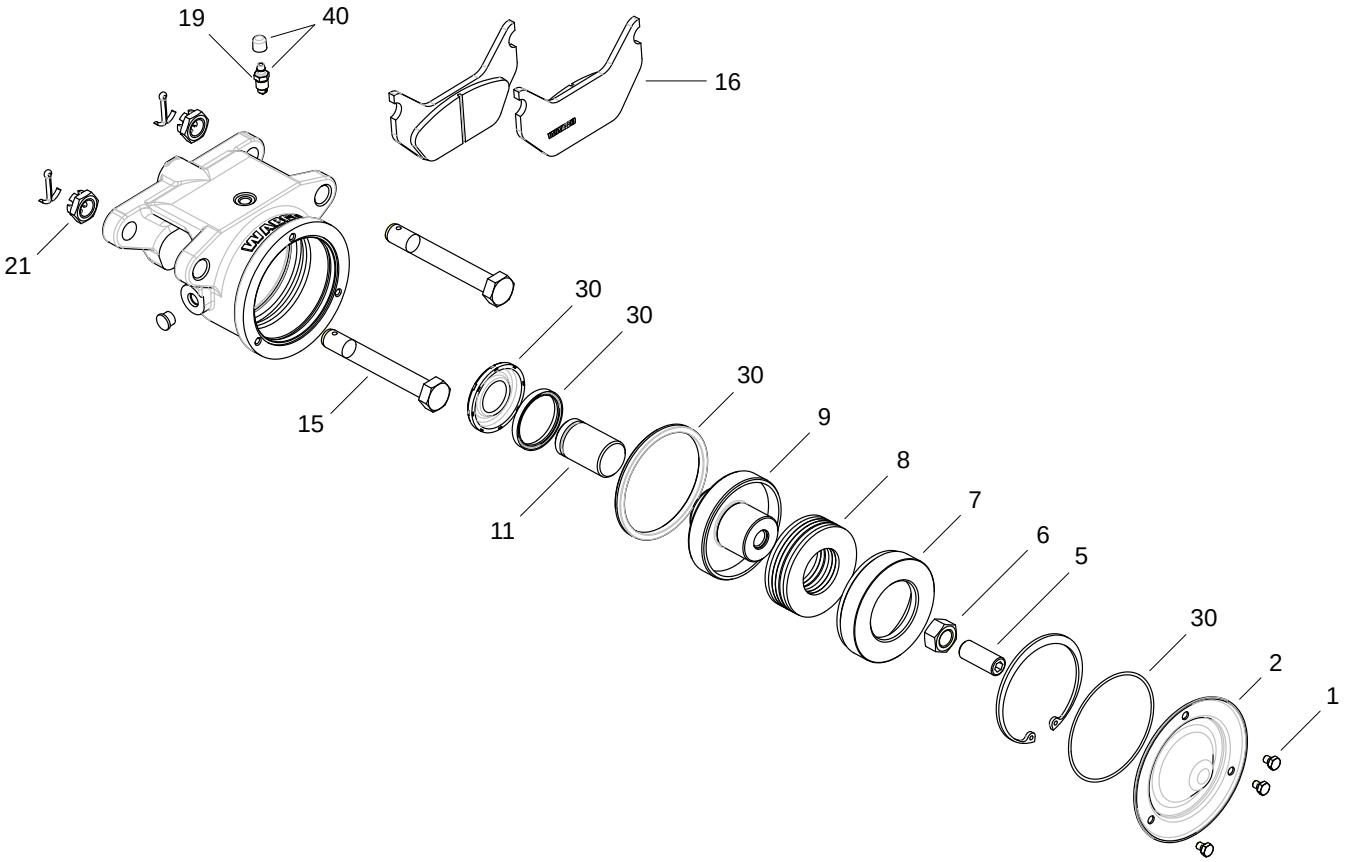

HYDRAULIC BRAKES

340 VI OE – FLOATING CALIPER DISC BRAKE WITH MAGNET

Service Part	Part No.	Item No.
Brake	40 034 005	
Repair kit	12 999 521VT	30
Ring	13 701 116	3
Screw	18 425 476	4
Set of dished plate springs	12 303 004	6
Piston	13 477 058	7
Thrust piece	13 229 167	10
Magnet	17 861 001	13
Ring	17 665 107	14
Brake pad	12 182 121	15
Bleeding valve	16 200 083	19
Bolt	13 151 249	20
Screw	13 103 013	24
Sealing ring	16 500 780	25
Bleeding valve	16 200 152	40

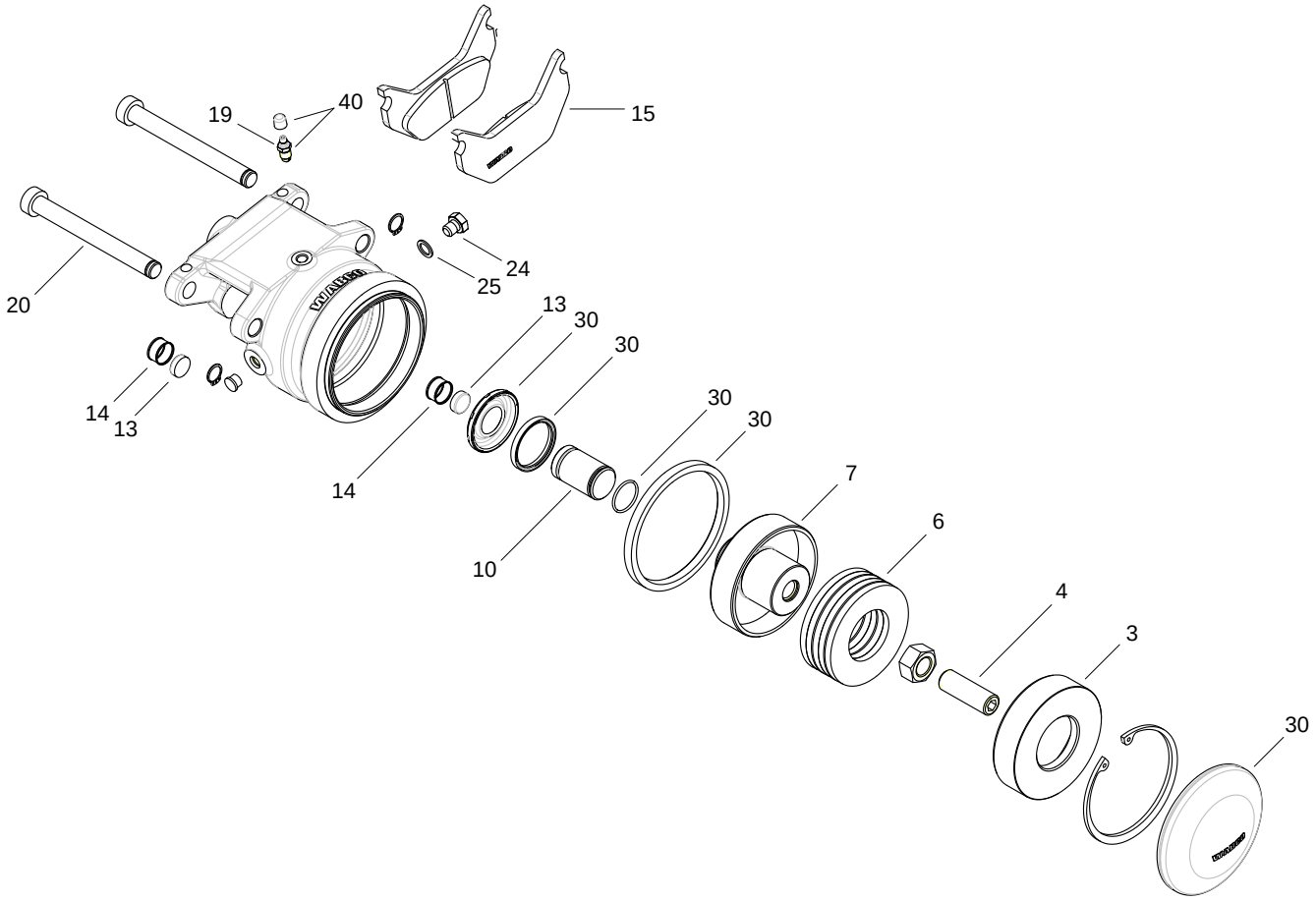

DRUM BRAKES

230×35 SM OE/OEM
230×50 SM OEM

Brake Type	Service Part	Part No.	Diameter	Torque	Wheel Size
230×35 SM OE/OEM	Pull spring (22)	13 301 169	230 to 310 mm / 9.06 to 12.20 in	1,100 - 4,000 Nm / 820 - 3,000 ft lbs	14 to 16 in
	Spring plate (25)	13 306 010			
230×50 SM OEM	Pull spring (21)	13 301 217			
	Spring plate (23)	13 302 117			

Complete brakes no longer available.

DRUM BRAKES

300x55 SM OEM

Service Part	Part No.	Diameter	Torque
Cable lever (9)	13 160 219	300 mm / 11.81 in	5,000 Nm / 3,700 ft lbs
Cable lever (9)	13 160 220		
Thrust piece (10)	13 229 171		
Pull spring (28)	13 301 215		
Strap plate (3)	13 513 029		
Plug (2)	13 826 001		

Complete brakes no longer available.

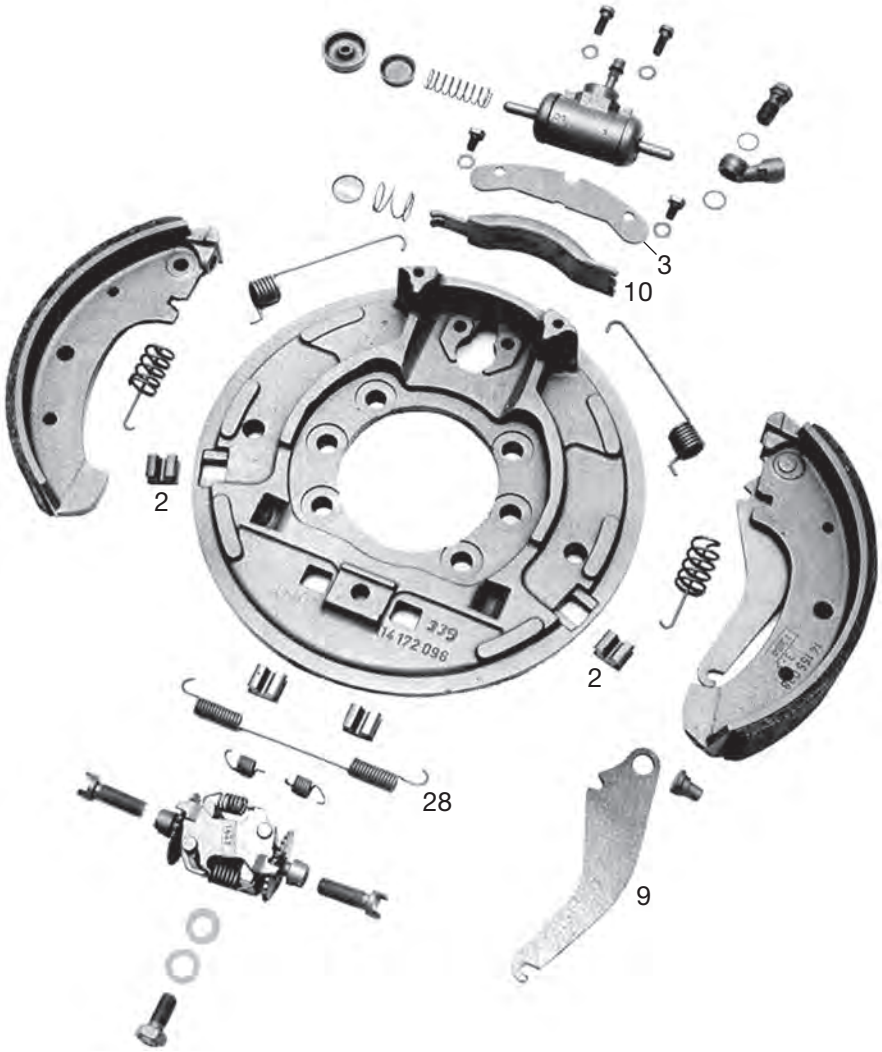

DRUM BRAKES

315x80 SM OE/OEM

Service Part	Part No.	Diameter	Torque	Wheel Size
Adjuster (13)	12 603 135	180 to 315 mm / 7.09 to 12.40 in	1,800 - 12,000 Nm / 15,930 - 106,200 ft lbs	8 to 15 in
Pull spring (20)	13 301 093			
Pull spring (21)	13 301 215			
Pressure spring (22)	13 302 010			
Pressure spring (-)	13 302 034			
Strap plate (3)	13 513 068			
Locking plate (24)	13 731 000			
Locking plate (24)	13 731 003			
Plug (2)	13 826 001			
Wheel cylinder (11)	16 134 106			
Sealing ring (-)	16 500 030			

500x160 SM OE/OEM
504x160 SM OE/OEM

Brake Type	Service Part	Part No.	Diameter	Torque
500×160 SM OE/OEM	Adjuster (14)	12 603 084VT	500 mm/19.7 in	30,000 - 40,000 Nm/ 22,130 - 29,500 ft lbs
504×160 SM OE/OEM	Repair kit	12 999 739VT		
	Pull spring (21)	13 301 134		

360x170 ZE
410x180 ZE

Brake Type	Service Part	Part No.	Diameter	Torque	Wheel Size
360×170 ZE	Expander unit (7)	12 739 075VT	360 and 410 mm / 14.17 and 16.14 in	14,000 - 23,000 Nm / 10,300 - 17,000 ft lbs	19.5 to 22.5 in
410×180 ZE	Brake shoe (5+6)	12 258 253VT			
	Repair kit (6+Rivets)	12 999 442VT			
	Expander unit (7)	12 739 085VT			
	Pull spring (8)	13 301 161			
	Screw (-)	13 730 138			
	Lock nut (-)	13 551 045			

Complete brakes no longer available.

DRUM BRAKES

315x80 SM OE/OEM
500×160 SM OE/OEM
504×160 SM OE/OEM

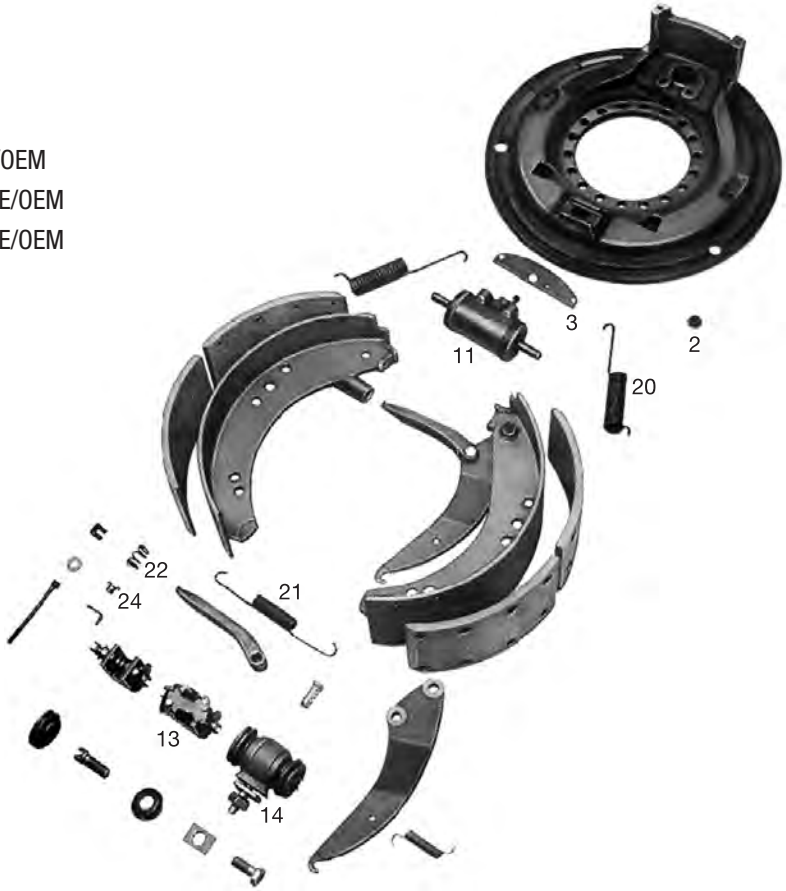

360×170 ZE
410×180 ZE

Complete brakes no longer available.

DRUM BRAKES

400x120 SM OEM
400x140 SM OEM

Brake Type	Service Part	Part No.	Diameter	Torque
400×120 SM OEM	Pull spring (22)	13 301 159	400 mm / 15.75 in	16,000 - 12,000 Nm / 10,800 - 8,850 ft lbs
400×140 SM OEM	Wheel cylinder (14)	16 131 004		

Complete brakes no longer available.

DRUM BRAKES

410x220 ZG

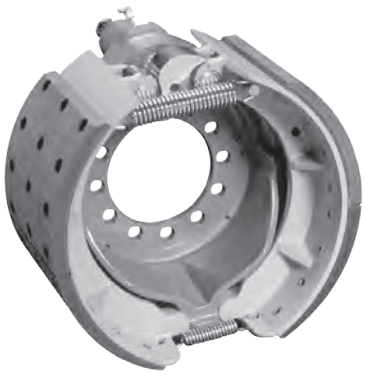

Service Part	Part No.	Diameter	Torque	Wheel Size
Repair kit (13+14)	12 999 114VT	410 mm / 16.14 in	16,000 - 20,000 Nm / 11,900 - 14,800 ft lbs	22.5 in
Repair kit (4+5+6)	12 999 528VT			
Brake shoe (7)	13 155 094			
Brake cam shaft, length 12.7 in (9)	13 161 338VT			
Brake cam shaft, length 11.7 in (9)	13 161 372			
Pull spring (14)	13 301 111			

Complete brakes no longer available.

FEATURES OF THE TRISTOP™D DOUBLE DIAPHRAGM SPRING BRAKE CHAMBER

Sealing

- Redundant in driving position
- Extra protection against dirt and dust impact

Parking spring

- Powder-coated
- Low relaxation
- Coil-clash free design
- Barrel-shaped parking spring with coil-clash free design for installation in a wide range of applications

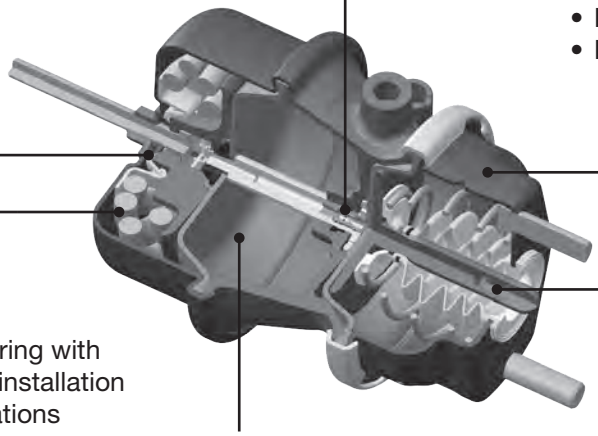

Internal Breathing Valve (IBV)

- Provides clean and dry air
- Extended service life of the device

Spring room

- Completely powder-coated
- Higher corrosion resistance ensuring longer service life and lower Total Cost of Ownership

Vulcanized diaphragm

- Longer service life

Longer push rod

- For universal applications

TRISTOP™D

UNISTOP™

TRISTOP™

BRAKE CHAMBERS

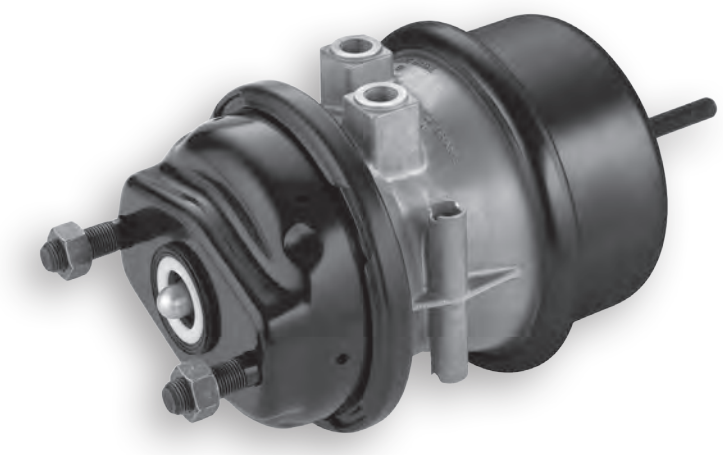

TRISTOP™D for disc brakes

TRISTOP™D FOR DISC BRAKES								
Size (Inch)	Stroke		Push-Rod Length		IBV	Port Position	Clamp Ring Position	Part Number
	mm	Inch	mm	Inch				
18/24"	64	2.52"	15.0	0.59"	IBV	0°	180°	925 347 006 0
18/24"	64	2.52"	15.0	0.59"	IBV	45°	180°	925 347 007 0
18/24"	64	2.52"	15.0	0.59"	IBV	135°	180°	925 347 008 0
20/24"	64	2.52"	15.0	0.59"	IBV	0°	180°	925 380 002 0
20/24"	64	2.52"	15.0	0.59"	IBV	45°	180°	925 380 003 0
20/24"	64	2.5"	15.0	0.59"	IBV	135°	180°	925 380 004 0
20/24"	64	2.52"	15.0	0.59"	IBV	0°	180°	925 380 020 0
20/24"	64	2.52"	15.0	0.59"	IBV	45°	180°	925 380 021 0
20/24"	64	2.52"	15.0	0.59"	IBV	135°	180°	925 380 022 0

BRAKE CHAMBERS

TRISTOP™D for drum brakes

TRISTOP™D FOR DRUM BRAKES - IBV VARIANTS - 20/30"... 24/30"									
Size (Inch)	Stroke		Push-Rod Length (Incl. Yoke)*		Yoke	Port Position	Clamp Ring Position	Part Number	Replacement For
	mm	Inch	mm	Inch					
20/30"	75/75	2.95"/2.95"	213	8.39"	-	90°	315°	925 375 110 0	925 375 100 0 925 375 101 0
24/30"	75/75	2.95"/2.95"	213	8.39"	-	90°	315°	925 376 121 0	925 376 100 0 925 376 104 0
24/30"	75/75	2.95"/2.95"	213	8.39"	-	0°	135°	925 376 122 0	925 376 101 0
24/30"	75/75	2.95"/2.95"	190	7.48"	Yoke	90°	315°	925 376 123 0	925 376 103 0
24/30"	75/75	2.95"/2.95"	264	10.39"	Yoke	90°	315°	925 376 124 0	925 376 106 0
24/30"	75/75	2.95"/2.95"	120	4.72"	Yoke	0°	135°	925 376 125 0	925 376 107 0
24/30"	75/75	2.95"/2.95"	227	8.94"	Yoke	90°	315°	925 376 126 0	925 376 110 0
24/30"	64/64	2.52"/2.52"	224	8.82"	-	90°	315°	925 376 201 0	925 376 200 0

* Push rod stand out for variants without fork / stand out for variants with fork have been noted.

BRAKE CHAMBERS

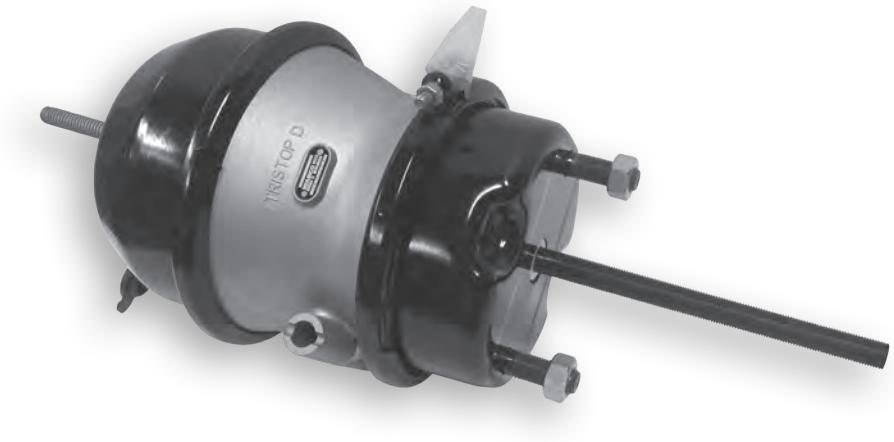

TRISTOP™D for drum brakes

TRISTOP™D FOR DRUM BRAKES - IBV VARIANTS - 30/30"									
Size (Inch)	Stroke		Push-Rod Length (Incl. Yoke)*		Yoke	Port Position	Clamp Ring Position	Part Number	Replacement For
	mm	Inch	mm	Inch					
30/30"	75/75	2.95"/2.95"	212	8.35"	-	90°	315°	925 377 121 0	925 377 100 0 925 377 101 0
30/30"	75/75	2.95"/2.95"	212	8.35"	-	35°	315°	925 377 125 0	925 377 102 0
30/30"	75/75	2.95"/2.95"	268	10.55"	Yoke	90°	315°	925 377 122 0	925 377 103 0
30/30"	75/75	2.95"/2.95"	268	10.55"	Yoke	0°	135°	925 377 123 0	925 377 105 0
30/30"	75/75	2.95"/2.95"	227	8.94"	Yoke	90°	315°	925 377 124 0	925 377 106 0
30/30"	64/64	2.52"/2.52"	225	8.86"	-	90°	315°	925 377 201 0	925 377 200 0
30/30"	63.5	2.5"	254	10.00"	-	0°	180°	925 392 039 0	-

12

TRISTOP™D FOR DRUM BRAKES - OPEN HOLE VARIANTS (OH)									
Size (Inch)	Stroke		Push-Rod Length (Incl. Yoke)*		Yoke	Port Position	Clamp Ring Position	Part Number	Replacement For
	mm	Inch	mm	Inch					
20/30"	75/75	2.95"/2.95"	251	9.88"	Yoke	90°	315°	925 375 001 0	925 375 100 0
24/30"	75/75	2.95"/2.95"	279	10.98"	Yoke	90°	315°	925 376 112 0	925 376 106 0
30/30"	75/75	2.95"/2.95"	288	11.34"	Yoke	90°	315°	925 377 110 0	925 377 100 0
30/30"	63.5	2.5"	254	10.00"	-	0°	180°	925 392 038 0	-

* Push rod stand out for variants without fork / stand out for variants with fork have been noted.

BRAKE CHAMBERS

UNISTOP™ for disc brakes

UNISTOP™ FOR DISC BRAKES								
Size (Inch)	Stroke		Push-Rod Length		Yoke	Port Position	Clamp Ring Position	Part Number
	mm	Inch	mm	Inch				
18	64	2.50"	15.0	0.59"	-	0°	180°	400 512 003 0
18	64	2.50"	15.0	0.59"	-	45°	180°	400 512 004 0
18	64	2.50"	15.0	0.59"	-	135°	180°	400 512 005 0
20	65	2.56"	15.0	0.59"	-	180°	180°	423 505 075 0
20	65	2.56"	15.0	0.59"	-	135°	180°	423 505 150 0
20	65	2.56"	15.0	0.59"	-	45°	180°	423 505 151 0
20	65	2.56"	15.0	0.59"	-	0°	180°	423 505 152 0
22	65	2.56"	15.0	0.59"	-	10°	180°	423 510 044 0
22	65	2.56"	15.0	0.59"	-	-10°	180°	423 510 045 0
22	65	2.56"	15.0	0.59"	-	45°	180°	423 510 046 0
22	65	2.56"	15.0	0.59"	-	-45°	180°	423 510 047 0
22	65	2.56"	15.0	0.59"	-	90°	0°	423 510 048 0
24	65	2.56"	15.0	0.59"	-	90°	-90°	423 506 183 0
24	65	2.56"	15.0	0.59"	-	10°	180°	423 506 184 0
24	65	2.56"	15.0	0.59"	-	-10°	180°	423 506 185 0
24	65	2.56"	15.0	0.59"	-	45°	180°	423 506 186 0
24	65	2.56"	15.0	0.59"	-	-45°	180°	423 506 187 0
24	65	2.56"	15.0	0.59"	-	90°	0°	423 506 188 0
24	65	2.56"	15.0	0.59"	-	0°	90°	423 506 065 0

BRAKE CHAMBERS

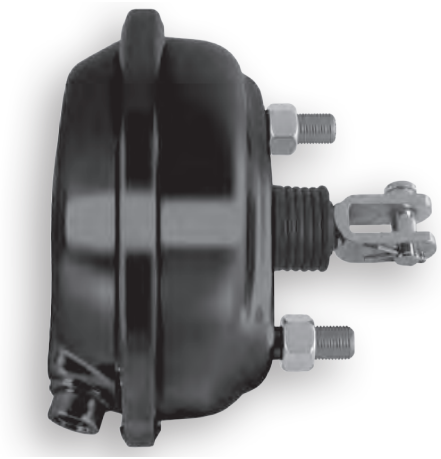

UNISTOP™ for drum brakes

UNISTOP™ FOR DRUM BRAKES - 16"... 24"								
Size (Inch)	Stroke		Push-Rod Length		Yoke	Port Position	Clamp Ring Position	Part Number
	mm	Inch	mm	Inch				
16	64	2.52"	57.2	2.25"	Yoke	30° central	crimped	423 104 015 0
16	64	2.52"	57.2	2.25"	Yoke	-30° central	crimped	423 104 016 0
16	64	2.52"	57.2	2.25"	Yoke	central	crimped	423 104 013 0
16	75	2.95"	38.0	1.50"	-	270°	22° 30'	423 104 050 0
16	75	2.95"	38.0	1.50"	-	270°	22° 30'	423 104 053 0
20	57	2.24"	37.0	1.46"	Yoke	135°	-90°	423 105 704 0
20	64	2.52"	57.2	2.25"	Yoke	central	crimped	423 105 011 0
20	64	2.52"	57.2	2.25"	Yoke	-30° central	crimped	423 105 018 0
20	64	2.52"	57.2	2.25"	Yoke	30° central	crimped	423 105 017 0
20	64	2.52"	25.4	1.00"	-	central	crimped	423 105 019 0
20	64	2.52"	25.4	1.00"	-	30° central	crimped	423 105 023 0
20	64	2.52"	25.4	1.00"	-	-30° central	crimped	423 105 024 0
20	75	2.95"	227.0	8.94"	Yoke	180°	45°	423 105 900 0
24	75	2.95"	186.0	7.32"	-	180°	45°	423 106 900 0
24	76	2.99"	57.2	2.25"	Yoke	30° central	crimped	423 106 007 0
24	76	2.99"	57.2	2.25"	Yoke	-30° central	crimped	423 106 008 0
24	76	2.99"	25.4	1.00"	-	-30° central	crimped	423 106 012 0
24	76	2.99"	25.4	1.00"	-	30° central	crimped	423 106 011 0
24	76	2.99"	25.4	1.00"	-	central	crimped	423 106 010 0
24	76	2.99"	57.2	2.25"	Yoke	central	crimped	423 106 006 0

BRAKE CHAMBERS

UNISTOP™ for drum brakes

UNISTOP™ FOR DRUM BRAKES - 30"

Size (Inch)	Stroke		Push-Rod Length		Yoke	Port Position	Clamp Ring Position	Part Number
	mm	Inch	mm	Inch				
30	75	2.95"	186.0	7.32"	-	180°	45°	423 107 900 0
30	76	2.99"	147.3	5.80"	-	central	crimped	423 107 027 0
30	76	2.99"	25.4	1.00"	-	-30° central	crimped	423 107 026 0
30	76	2.99"	25.4	1.00"	-	30° central	crimped	423 107 025 0
30	76	2.99"	25.4	1.00"	-	central	crimped	423 107 018 0
30	76	2.99"	57.2	2.25"	Yoke	-30° central	crimped	423 107 017 0
30	76	2.99"	57.2	2.25"	Yoke	30° central	crimped	423 107 016 0
30	76	2.99"	57.2	2.25"	Yoke	central	crimped	423 107 015 0

UNISTOP™ CLAMP RINGS FOR DRUM BRAKES

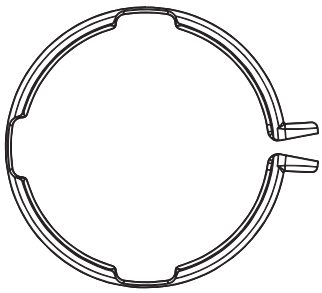

Size (Inch)	Part No.
16"	423 104 351 4
30"	423 107 350 4

BRAKE CHAMBERS

TRISTOP™ for disc brakes

TRISTOP™ FOR DISC BRAKES									
Size (Inch)	Stroke		Push-Rod Length		IBV	Yoke	Port Position	Clamp Ring Position	Part Number
	mm	Inch	mm	Inch					
24/24"	64/64	2.52"	15,0	0.59"	IBV	-	90°	0°	925 481 376 0
24/24"	64/64	2.52"	15,0	0.59"	IBV	-	90°	-90°	925 481 375 0
24/24"	64/64	2.52"	15,0	0.59"	IBV	-	45°	90°	925 481 377 0
24/24"	64/64	2.52"	15,0	0.59"	IBV	-	-45°	-90°	925 481 378 0
24/30	65	2.56"	15,0	0.59"	IBV	-	30°	180°	925 481 016 0
24/30"	65/65	2.56"	15,0	0.59"	IBV	-	-30°	180°	925 481 017 0

BRAKE CHAMBERS

TRISTOP™ for drum brakes

TRISTOP™ FOR DRUM BRAKES									
Size (Inch)	Stroke		Push-Rod Length		IBV	Yoke	Port Position	Clamp Ring Position	Part Number
	mm	Inch	mm	Inch					
20/30"	57/57	2.24"	77,0	3.03"	-	Yoke	30°	90°	925 320 515 0

TRISTOP™ FOR WEDGE BRAKES									
Size (Inch)	Stroke		Push-Rod Length		IBV	Yoke	Port Position	Clamp Ring Position	Part Number
	mm	Inch	mm	Inch					
36/30"	76/76	2.99"	217,0	8.54"	-	-	0°	Double clamp ring (45° and -135°)	925 323 130 0
20/24"	53/53	2.09"	81,0	3.19"	-	-	0°	-135°	425 333 212 0

AUTOMATIC SLACK ADJUSTERS

AUTOMATIC SLACK ADJUSTERS								
Part No.			Bracket Type	Arm Length (Inch)	No. of Teeth	Cross References		Vehicle Application
Easyfit™ + Installation Kit	Easyfit™	Installation Kit				Hendrickson	Haldex	
433 225 925 2	433 225 099 0	433 225 920 2	Plate	5.5	28	409-20002	40020211	Trailer
433 225 926 2	433 225 101 0	433 225 920 2	Plate	6	28	409-20006	40020212	Trailer
433 225 927 2	433 225 136 0	433 225 920 2	Plate	5.5	37	409-20024	40020213	Trailer
433 225 928 2	433 225 102 0	433 225 920 2	Plate	5.5	10	409-20000	40020215	Trailer
433 225 929 2	433 225 103 0	433 225 920 2	Plate	6	10	409-20004	40020216	Trailer
433 225 930 2	433 225 138 0	433 225 922 2	Strap	6	28	409-20023	40020234	Truck (drive axle)
433 225 931 2	433 225 137 0	433 225 922 2	Strap	5.5	28	409-20019	40020231	Truck (drive axle)
433 225 932 2	433 225 139 0	433 225 922 2	Strap	5.5	25	409-20046	40020240	Truck (drive axle)
433 225 933 2	433 225 101 0	433 225 921 2	Clamp	6	28	409-20006	40020243	Trailer
433 225 934 2	433 225 103 0	433 225 921 2	Clamp	6	10	409-20004	40020244	Trailer

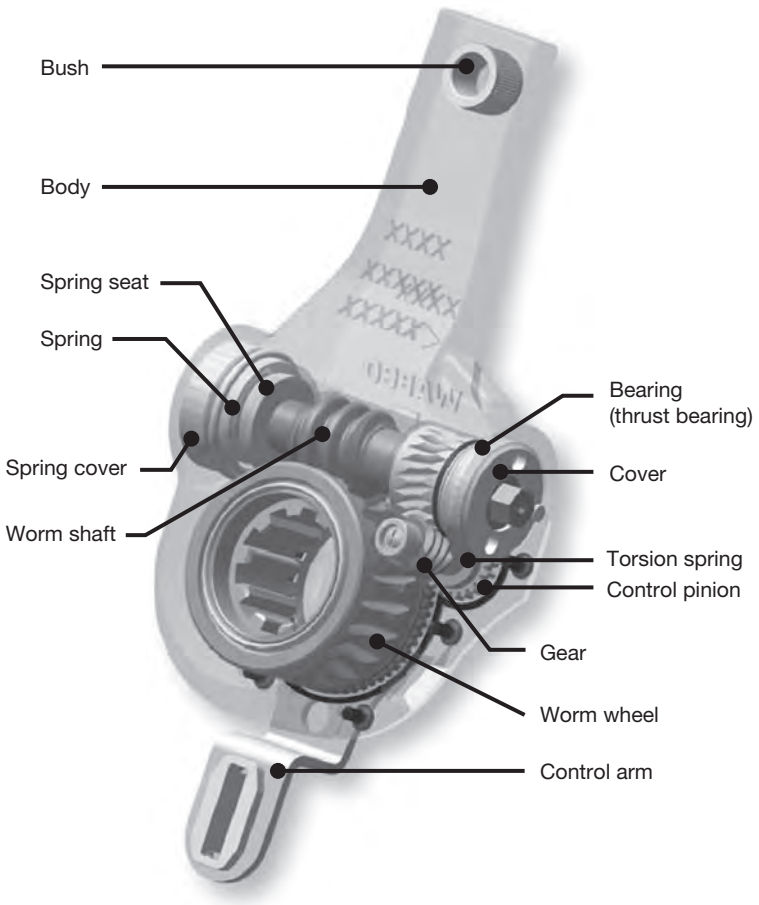

433 225 920 2
Plate,
Locking piece,
Bolts, Washer

433 225 921 2
Clamp,
Locking pieces,
Nuts

433 225 924 2
Locking pieces,
Guides

433 225 923 2
Guides

433 225 922 2
Strap, Nut

TABLE OF CONTENTS

TITLE **PAGE**

OPTITIRE™ 13-2

INNOVATIVE TECHNOLOGY FOR INTEGRATED MONITORING OF TIRE PRESSURE ON TRUCKS, BUSES AND TRAILERS

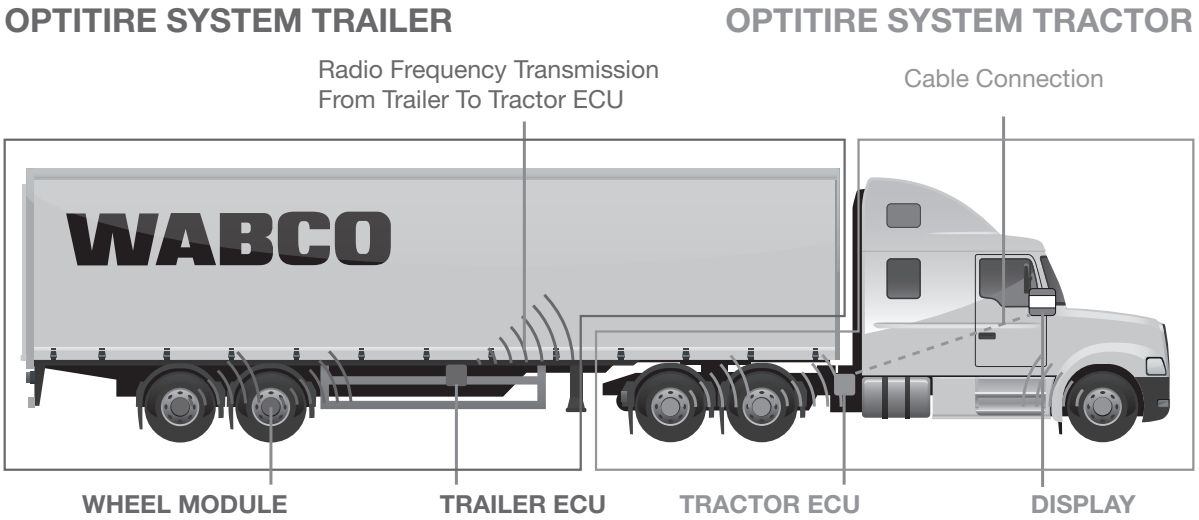

WABCO OptiTire™ is the next generation tire pressure monitoring solution especially developed for commercial vehicles. OptiTire™ provides the driver with constant updates of tire pressures directly from each monitored wheel. OptiTire can help prevent a tire blowout by informing the truck driver of any leaks. (Leaks can create low tire pressure which could result in a blowout). In combination with telematics, OptiTire™ also reports the tire pressures to a web portal and warns the fleet manager or dispatcher via SMS or e-mail.

FEATURES

- Reliable measurement of absolute tire pressure by wheel modules
- Records pressure information of both truck and trailer
- Analysis of the tire pressure profile
  – Compares parameterized thresholds
  – Detects early leakage by axle comparison
- Tire pressure data from each tire can be sent to the driver in the truck cabin via CAN or wireless connection to dashboard or OptiTire™ display
- Tire pressure readouts can remotely be sent to dispatchers via telematics
- Warning signal is shown on display in cabin in case of critical pressure variation

BENEFITS

- Maximize the life of your tires by maintaining recommended tire pressures
- Save fuel consumption by preventing under-inflation of tires
- Real-time tire pressure readouts provide drivers and dispatchers with early warning of critical tire pressure variation
- Early leakage detection gives drivers time to react before tire failure causes vehicle breakdown
- Spots slow punctures early, giving fleet operators a better chance of repairing – rather than replacing – a damaged tire

OPTITIRE

ELECTRONIC CONTROL UNIT

	Part No.	Description
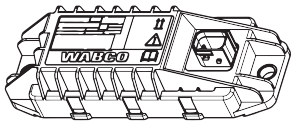	446 220 100 0	ECU truck retrofit
	446 220 110 0	ECU trailer retrofit
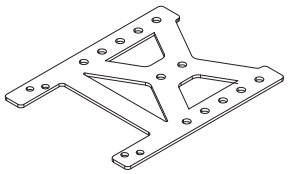	960 901 050 4	ECU holder

WHEEL MODULE

	Part No.	Description
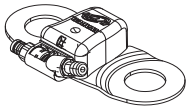	960 731 071 0	Wheel module WM2, 20° filling valve with B-shaped bracket
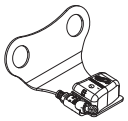	960 731 073 0	Wheel module WM2, 20° filling valve with T-shaped bracket
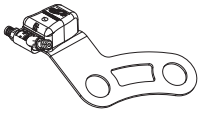	960 731 075 0	Wheel module WM2, 20° filling valve with L-shaped bracket
	960 731 921 2	Wheel module WM2 replacement, 20° filling valve
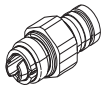	893 770 005 2	Replacement connector
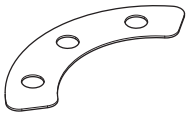	960 905 824 4	Balancing plate

DISPLAY

	Part No.	Description
	446 221 000 0	Display

OPTITIRE

CONNECTING TUBE

	Part No.	Description
	960 731 800 0	Connecting tube, 13.9" length with 0° brass fastener
	960 731 801 0	Connecting tube, 13.9" length with 90° brass fastener
	960 731 802 0	Connecting tube, 13.9" length with 135° brass fastener
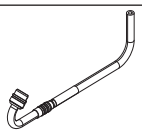	960 731 803 0	Connecting tube, 5.3" length with 135° brass fastener
	960 731 804 0	Connecting tube, 5.3" length with 135° brass fastener
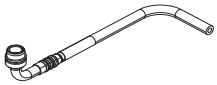	960 731 808 0	Connecting tube, 4.6" length with 90° brass fastener
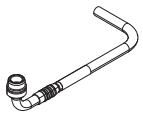	960 731 816 0	Connecting tube, 4.3" length with 90° brass fastener
	960 731 821 0	Connecting tube, 7.9" length with 90° brass fastener
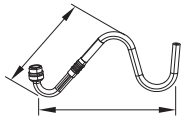	960 731 822 0	Connecting tube, zig-zag 4.9" length with 135° brass fastener
	960 731 823 0	Connecting tube, 7.1" length with 90° brass fastener
	960 731 825 0	Connecting tube, 4.3" length with 90° brass fastener
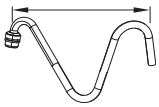	960 731 827 0	Connecting tube, zig-zag 7.4" length with 135° brass fastener

OPTITIRE

CABLE

	Part No.	Description
	449 376 070 0	Cable set, open end with 7pin DIN socket
	449 376 250 0	Cable set, open end with 7pin DIN socket
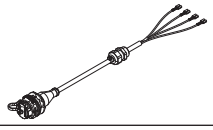	449 601 060 0	Cable set, 4 pole diagnostic socket
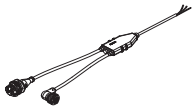	449 674 273 0	Cable set trailer
	449 674 306 0	Cable set trailer
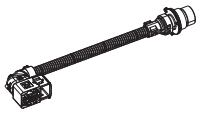	894 600 001 2	Adapter cable
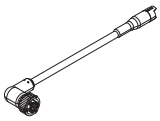	894 607 295 0	Cable set towing vehicle, 5-pin
	894 607 390 0	Cable set towing vehicle, 7-pin with brake light connection

DIAGNOSTICS AND ACCESSORIES

	Part No.	Description
	247 301 730 0	Diagnostic software
	300 200 001 0	TPMS Manager
	446 300 348 0	Diagnostic cable
	446 301 030 0	USB diagnostic interface
	815 010 045 3	System description, English
	815 040 045 3	System description, Spanish

NOTES:

TABLE OF CONTENTS

TITLE **PAGE**

691 BRAKE LOCK SYSTEMS 14-2
ELECTRIC ACTIVATED BRAKE LOCKS 14-4
CABLE BRAKE LOCKS 14-4
LEVER BRAKE LOCK 14-5
TWIST BRAKE LOCK 14-5
PRESSURE TESTING DEVICES 14-6
HYDRAULIC THROTTLE CONTROLS 14-7

691 BRAKE LOCK SYSTEMS

691 BRAKE LOCK SYSTEM MODELS		
Model Number	**Model**	**Vehicle Application**
02-691-101	Single Brake Lock System	for vehicles over 19,000 GVM
02-691-109	Single Brake Lock System	for vehicles under 19,000 GVM
02-691-201	Dual Brake Lock System	for vehicles over 19,000 GVM
02-691-209	Dual Brake Lock System	for vehicles under 19,000 GVM
02-691-303	3-Channel Anti-Lock Brake Lock System	for vehicles over 19,000 GVM
02-691-305	3-Channel Anti-Lock Brake Lock System	for vehicles under 19,000 GVM
02-691-403	4-Channel Anti-Lock Brake Lock System	for vehicles over 19,000 GVM optional on others

Remote Reservoir Kit
(part number 02-600-038
includes items below)

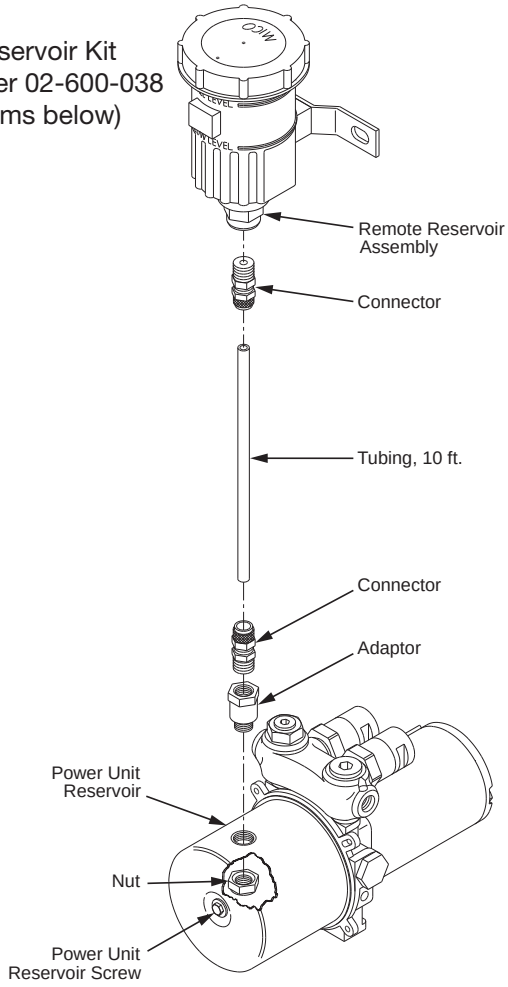

34-350-006 90° Elbow

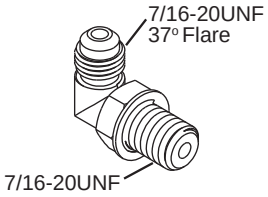

34-350-011 45° Elbow

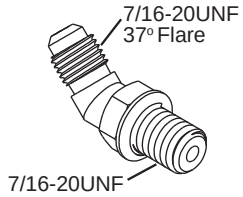

34-350-078 Straight Adapter

34-350-079 Straight Adapter

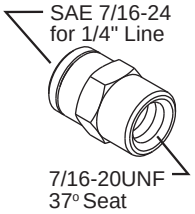

691 BRAKE LOCK SYSTEMS

691 SUB-COMPONENTS						
System Model Number	Description	Power Unit	Control Module	Actuator	User Interface	Main Wire Harness
02-691-101	Single (1 3/4 in bore)	20-410-014	29-585-001	20-460-013	32-585-007	32-820-021
02-691-109	Single (1 1/4 in bore)	20-410-014	29-585-001	20-460-018	32-585-007	32-820-021
02-691-201	Dual (1 3/4 in bore)	20-410-014	29-585-001	20-460-012	32-585-007	32-820-021
02-691-209	Dual (1 1/4 in bore)	20-410-014	29-585-001	20-460-017	32-585-007	32-820-021
** 02-691-223	Dual (1 1/4 in bore)	20-410-014	29-585-001	20-460-018 (two)	32-585-007	32-820-021
*** 02-691-303	3-Channel	20-410-014	29-585-001	20-460-013 (one) 20-460-017 (one)	32-585-007	32-820-021
**** 02-691-305	3-Channel	20-410-014	29-585-001	20-460-018 (one) 20-460-017 (one	32-585-007	32-820-021
***** 02-691-403	4-Channel	20-410-014	29-585-001	20-460-017 (two)	32-585-007	32-820-021

** Consists of two 1 1/4 inch diameter single actuators.
*** Consists of one 1 3/4 inch diameter single actuator and one 1 1/4 inch diameter dual actuator.
**** Consists of one 1 1/4 inch diameter single actuator and one 1 1/4 inch diameter dual actuator.
***** Consists of two 1 1/4 inch diameter dual actuators.

User Interface

Control Module

Power Unit

Single Actuator

Dual Actuator

Wire Harness

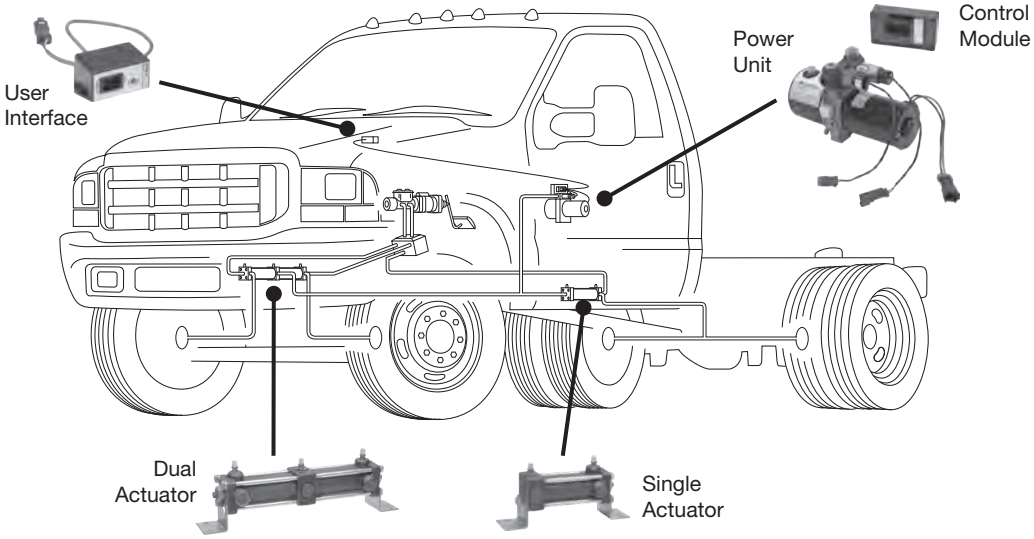

ELECTRIC ACTIVATED BRAKE LOCKS

Model No.	Description
02-620-009	Brake Lock, 12 VDC electric activated, DOT 3, 4, 5 and 5.1 brake fluid
02-620-172	Brake Lock, 12 VDC electric activated, Mineral base hydraulic oil
02-620-173	Brake Lock, 24 VDC electric activated, DOT 3, 4, 5 and 5.1 brake fluid

SPECIFICATIONS

Maximum Operating Temperature	Fluid Type	Toggle Switch	Low Pressure Warning Switch
250 °F	Mineral base hydraulic oil models and brake fluid models	DPST, 15 A @ 12/24 VDC	NO, 20 A @ 12 VDC NO, 12 A @ 24 VDC

CABLE BRAKE LOCKS

DUAL CABLE LOCK

Model No.	Description
02-640-169	Dual Cable Lock - 3/16 and 1/4 inch fittings, includes 10 foot cable, DOT 3, 4, 5 and 5.1 brake fluid
02-640-202	Dual Cable Lock - 3/16 and 1/4 inch fittings, includes 10 foot cable, Mineral base hydraulic oil

CABLE LOCK

Model No.	Description
02-640-023	Cable Lock - 3/16 and 1/4 inch fittings, includes 10 foot cable, DOT 3, 4, 5 and 5.1 brake fluid
02-640-122	Cable Lock, includes 10 foot cable, Mineral base hydraulic oil

LEVER BRAKE LOCK

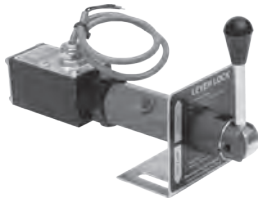

Model No.	Description
02-640-125	Lever Lock - 3/16 inch and 1/4 inch fittings, DOT 3, 4, 5 and 5.1 brake fluid
02-640-126	Lever Lock - 3/16 inch and 1/4 inch fittings, Mineral base hydraulic oil
03-640-131	Lever Lock - 1/4 inch fittings, normally open interlock switch, DOT 3, 4, 5 and 5.1 brake fluid

TWIST BRAKE LOCK

Model No.	Description
03-640-075	Twist Lock - 3/16 inch and 1/4 inch fittings, DOT 3, 4, 5 and 5.1 brake fluid
03-640-076	Twist Lock - 3/16 inch and 1/4 inch fittings, Mineral base hydraulic oil

PRESSURE TESTING DEVICES

QUADRIGAGE™

	Model Number	Gauge Type	Hose Length (Inches)	Pressure Gauge Range (PSIG)			
				Vacuum	Low	Medium	High
	02-740-011	Standard	12	0-30	0-150	0-600	0-3000
	02-740-016	Standard	12	0-30	0-150	0-600	0-5000
	03-740-006	Standard	36	0-30	0-150	0-600	0-3000
	03-740-019	Standard	36	0-30	0-150	0-600	0-5000
	03-740-023	Standard	n\a	0-30	0-150	0-600	0-5000
	*12-740-006	Glycerin Filled	12	0-30	0-300	0-1000	0-6000
	*12-740-008	Glycerin Filled	36	0-30	0-300	0-1000	0-6000
	*12-740-011	Glycerin Filled	36	0-30	0-300	0-1000	0-4000

* Not recommended for unpressurized airfreight shipments.
UNIT CONVERSION: 1 PSI = 0.06895 bar 1 kg/cm^2 = 0.9807 bar

DIGITAL PRESSURE GAUGE

	Model No.	Description
	42-610-028	Gauge
	42-610-029	Gauge (with certification of calibration)
	12-740-017	Gauge and 12" hose
	12-740-018	Gauge and 36" hose
	12-740-019	Gauge, 12" hose, fitting kit and case
	12-740-020	Gauge, 36" hose, fitting kit and case
	42-590-002	12" hose only
	42-590-003	36" hose only
	12-700-002	Fitting kit only

HYDRAULIC THROTTLE CONTROLS

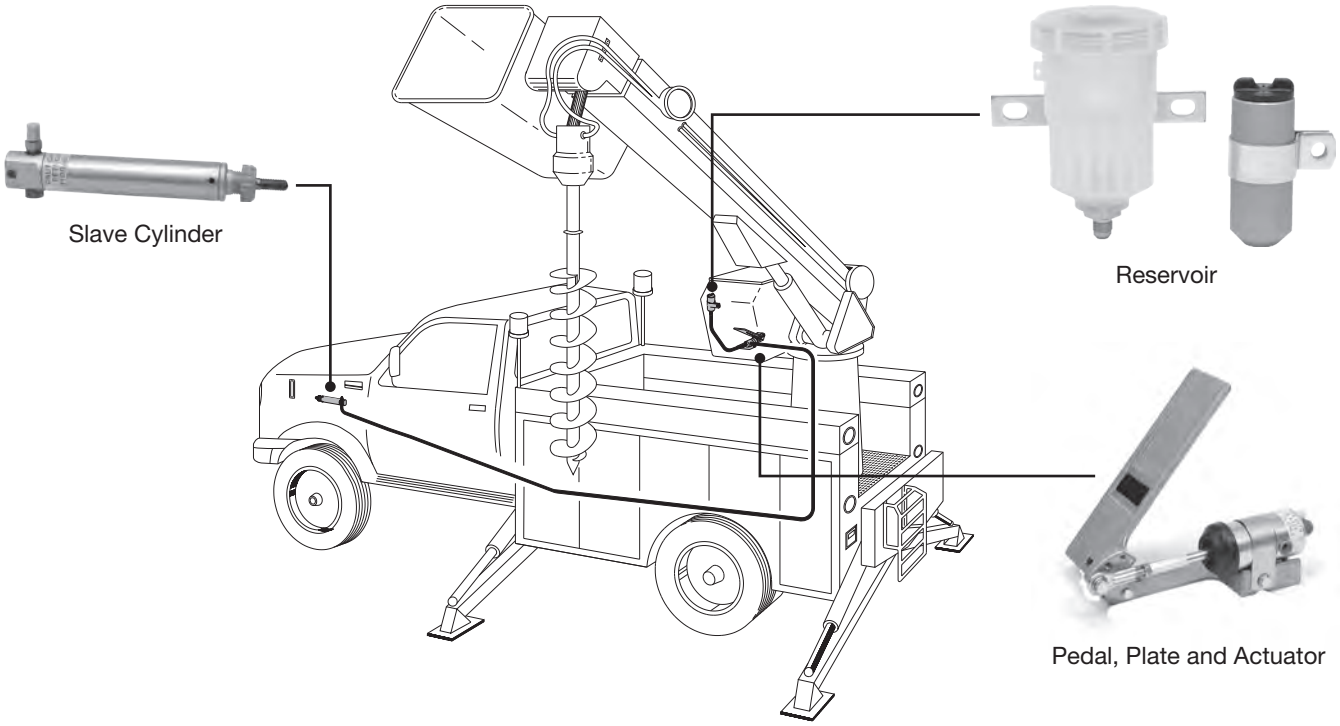

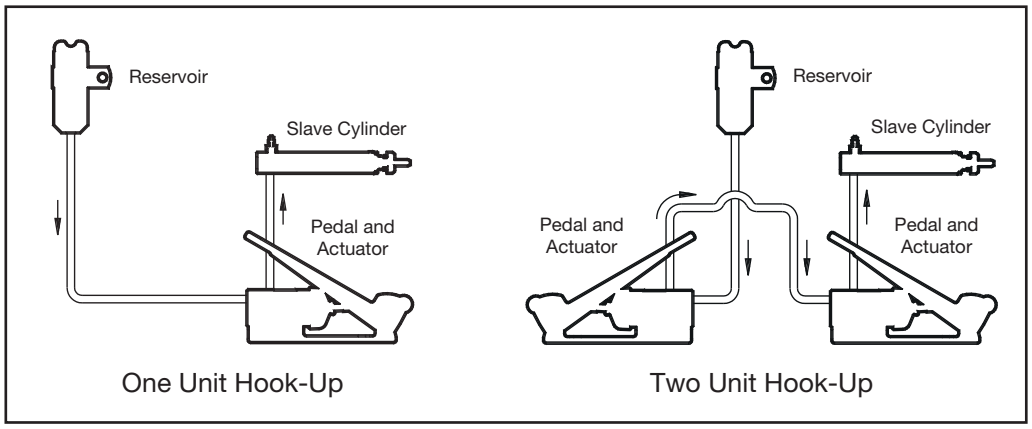

HYDRAULIC THROTTLE CONTROLS

COMPLETE MODELS

Model Number	Fluid Type	Description	Cylinder Type	Repair Kit
12-460-189	Brake Fluid	Pedal and Actuator, Slave Cylinder and Reservoir	Spring loaded slave cylinder	12-400-023
12-460-190	Hydraulic Oil	Pedal and Actuator, Slave Cylinder and Reservoir	Spring loaded slave cylinder	12-400-024
12-460-191	Brake Fluid	Pedal and Actuator, Slave Cylinder and Reservoir	Non-spring loaded slave cylinder	12-400-025
12-460-192	Hydraulic Oil	Pedal and Actuator, Slave Cylinder and Reservoir	Non-spring loaded slave cylinder	12-400-012

All complete models use reservoir 20-920-006.

PEDAL AND ACTUATOR

Model Number	Fluid Type	Bore	Stroke	Effective Stroke	Effective Displacement	Repair Kit	Actuator Only
12-460-185	Brake Fluid	1.250 in	0.63 in	0.56 in	0.73 in^3	12-400-007	12-460-187
12-460-186	Hydraulic Oil	1.250 in	0.63 in	0.56 in	0.73 in^3	12-400-002	12-460-188

SLAVE CYLINDER

Model Number	Fluid Type	Bore	Stroke	Fluid Volume Required for Full Stroke	Rod End Thread	Repair Kit
* 12-120-007	Brake Fluid	0.625 in	2.44 in	0.73 in^3	5/16 - 24	12-100-009
* 12-120-010	Hydraulic Oil	0.625 in	2.44 in	0.73 in^3	5/16 - 24	12-100-010
** 12-120-015	Brake Fluid	0.625 in	2.06 in	0.63 in^3	5/16 - 24	12-100-013
** 12-120-016	Hydraulic Oil	0.625 in	2.06 in	0.63 in^3	5/16 - 24	12-100-014

** Non-spring loaded slave cylinder.
** Spring loaded slave cylinder.
5° Effective Pedal Stroke - 0.48 inch movement of Slave Cylinder.

RESERVOIR

Model Number	Fluid Type	Capacity	Fittings
20-920-006	Brake Fluid or Hydraulic Oil	3.3 in^3 - filler cap with baffle and breather	Two connectors - 1/8-27NPTF Male × 1/4 Plastic Tube
20-920-009	Brake Fluid or Hydraulic Oil	3.3 in^3 - filler cap with baffle and breather	
20-920-509	Brake Fluid	14.5 in^3 - filler cap with diaphragm	1/4-18NPTF (interval) adaptable fitting
20-920-512	Hydraulic Oil	14.5 in^3 - filler cap with diaphragm	1/4-18NPTF (interval) adaptable fitting

See MICO Form No. 80-920-001 for complete information regarding reservoirs.

TABLE OF CONTENTS

TITLE **PAGE**

TRACTOR ABS ECU CROSS REFERENCE 15-2
SALES KIT SETS CROSS REFERENCE 15-15
ABS REPAIR KITS CROSS REFERENCE 15-17
CORES CROSS REFERENCE 15-18
REMAN PARTS CROSS REFERENCE 15-20

TRACTOR ABS ECU CROSS REFERENCE FOR AFTERMARKET PROGRAMMING				
Old ABS ECU Part Number	Old ABS ECU Part Number (1 Iteration Prior)	New Programmable WABCO ECU Part Number	Existing WABCO ECU Part Number (Part Number that Will Identify the Configuration File to download from http://wabco.snapon.com)	Type of ECU
400 850 326 0	400 864 304 0	400 864 009 0	400 864 304 0	E4.8
400 850 327 0	400 864 305 0	400 864 009 0	400 864 305 0	E4.8
400 850 340 0	400 864 305 0	400 864 009 0	400 864 305 0	E4.8
400 850 092 0	400 864 360 0	400 864 009 0	400 864 360 0	E4.8
400 850 102 0	400 864 360 0	400 864 009 0	400 864 360 0	E4.8
400 850 103 0	400 864 360 0	400 864 009 0	400 864 360 0	E4.8
400 850 138 0	400 864 360 0	400 864 009 0	400 864 360 0	E4.8
400 850 139 0	400 864 360 0	400 864 009 0	400 864 360 0	E4.8
400 850 160 0	400 864 360 0	400 864 009 0	400 864 360 0	E4.8
400 850 161 0	400 864 360 0	400 864 009 0	400 864 360 0	E4.8
400 850 168 0	400 864 360 0	400 864 009 0	400 864 360 0	E4.8
400 850 169 0	400 864 360 0	400 864 009 0	400 864 360 0	E4.8
446 004 601 0	400 864 360 0	400 864 009 0	400 864 360 0	E4.8
400 850 089 0	400 864 360 0	400 864 009 0	400 864 360 0	E4.8
400 850 106 0	400 864 360 0	400 864 009 0	400 864 360 0	E4.8
400 850 107 0	400 864 360 0	400 864 009 0	400 864 360 0	E4.8
400 850 108 0	400 864 360 0	400 864 009 0	400 864 360 0	E4.8
400 850 142 0	400 864 360 0	400 864 009 0	400 864 360 0	E4.8
400 850 143 0	400 864 360 0	400 864 009 0	400 864 360 0	E4.8
400 850 144 0	400 864 360 0	400 864 009 0	400 864 360 0	E4.8
400 850 164 0	400 864 360 0	400 864 009 0	400 864 360 0	E4.8
400 850 165 0	400 864 360 0	400 864 009 0	400 864 360 0	E4.8
400 850 166 0	400 864 360 0	400 864 009 0	400 864 360 0	E4.8
400 850 172 0	400 864 360 0	400 864 009 0	400 864 360 0	E4.8
400 850 173 0	400 864 360 0	400 864 009 0	400 864 360 0	E4.8
400 850 174 0	400 864 360 0	400 864 009 0	400 864 360 0	E4.8
446 004 618 0	400 864 360 0	400 864 009 0	400 864 360 0	E4.8
446 004 619 0	400 864 360 0	400 864 009 0	400 864 360 0	E4.8
446 004 620 0	400 864 360 0	400 864 009 0	400 864 360 0	E4.8
446 004 625 0	400 864 360 0	400 864 009 0	400 864 360 0	E4.8
400 850 099 0	400 864 361 0	400 864 009 0	400 864 361 0	E4.8
400 850 098 0	400 864 361 0	400 864 009 0	400 864 361 0	E4.8
446 004 603 0	400 864 361 0	400 864 009 0	400 864 361 0	E4.8
446 004 605 0	400 864 362 0	400 864 009 0	400 864 362 0	E4.8
400 850 323 0	400 864 364 0	400 864 009 0	400 864 364 0	E4.8
400 850 337 0	400 864 365 0	400 864 009 0	400 864 365 0	E4.8
400 850 366 0	400 864 366 0	400 864 009 0	400 864 366 0	E4.8
400 864 003 0	400 864 368 0	400 864 009 0	400 864 368 0	E4.8
400 850 325 0	400 864 303 0	400 864 011 0	400 864 303 0	E4.8
400 850 338 0	400 864 303 0	400 864 011 0	400 864 303 0	E4.8
400 850 091 0	400 864 400 0	400 864 011 0	400 864 400 0	E4.8

TRACTOR ABS ECU CROSS REFERENCE FOR AFTERMARKET PROGRAMMING				
Old ABS ECU Part Number	Old ABS ECU Part Number (1 Iteration Prior)	New Programmable WABCO ECU Part Number	Existing WABCO ECU Part Number (Part Number that Will Identify the Configuration File to download from http://wabco.snapon.com)	Type of ECU
400 850 087 0	400 864 400 0	400 864 011 0	400 864 400 0	E4.8
400 850 088 0	400 864 400 0	400 864 011 0	400 864 400 0	E4.8
400 850 097 0	400 864 400 0	400 864 011 0	400 864 400 0	E4.8
400 850 101 0	400 864 400 0	400 864 011 0	400 864 400 0	E4.8
400 850 104 0	400 864 400 0	400 864 011 0	400 864 400 0	E4.8
400 850 105 0	400 864 400 0	400 864 011 0	400 864 400 0	E4.8
400 850 137 0	400 864 400 0	400 864 011 0	400 864 400 0	E4.8
400 850 140 0	400 864 400 0	400 864 011 0	400 864 400 0	E4.8
400 850 141 0	400 864 400 0	400 864 011 0	400 864 400 0	E4.8
400 850 159 0	400 864 400 0	400 864 011 0	400 864 400 0	E4.8
400 850 162 0	400 864 400 0	400 864 011 0	400 864 400 0	E4.8
400 850 163 0	400 864 400 0	400 864 011 0	400 864 400 0	E4.8
400 850 167 0	400 864 400 0	400 864 011 0	400 864 400 0	E4.8
400 850 170 0	400 864 400 0	400 864 011 0	400 864 400 0	E4.8
400 850 171 0	400 864 400 0	400 864 011 0	400 864 400 0	E4.8
446 004 602 0	400 864 400 0	400 864 011 0	400 864 400 0	E4.8
400 850 090 0	400 864 400 0	400 864 011 0	400 864 400 0	E4.8
400 850 406 0	400 864 401 0	400 864 011 0	400 864 401 0	E4.8
400 850 703 0	400 866 337 0	400 866 164 0	400 866 337 0	E4.4B
400 866 009 0	400 866 337 0	400 866 164 0	400 866 337 0	E4.4B
400 866 228 0	400 866 341 0	400 866 164 0	400 866 341 0	E4.4B
400 866 241 0	400 866 342 0	400 866 164 0	400 866 342 0	E4.4B
400 850 871 0	400 866 343 0	400 866 164 0	400 866 343 0	E4.4B
400 866 001 0	400 866 343 0	400 866 164 0	400 866 343 0	E4.4B
400 866 086 0	400 866 344 0	400 866 164 0	400 866 344 0	E4.4B
400 866 930 0	400 866 346 0	400 866 164 0	400 866 346 0	E4.4B
400 850 629 0	400 866 347 0	400 866 164 0	400 866 347 0	E4.4B
400 866 002 0	400 866 347 0	400 866 164 0	400 866 347 0	E4.4B
400 850 335 0	400 866 351 0	400 866 164 0	400 866 351 0	E4.4B
400 866 229 0	400 866 351 0	400 866 164 0	400 866 351 0	E4.4B
400 850 630 0	400 866 352 0	400 866 164 0	400 866 352 0	E4.4B
400 866 003 0	400 866 352 0	400 866 164 0	400 866 352 0	E4.4B
400 866 071 0	400 866 353 0	400 866 164 0	400 866 353 0	E4.4B
400 866 236 0	400 866 354 0	400 866 164 0	400 866 354 0	E4.4B
400 850 661 0	400 866 356 0	400 866 164 0	400 866 356 0	E4.4B
400 866 004 0	400 866 356 0	400 866 164 0	400 866 356 0	E4.4B
400 850 631 0	400 866 357 0	400 866 164 0	400 866 357 0	E4.4B
400 850 645 0	400 866 357 0	400 866 164 0	400 866 357 0	E4.4B
400 850 670 0	400 866 357 0	400 866 164 0	400 866 357 0	E4.4B
400 866 005 0	400 866 357 0	400 866 164 0	400 866 357 0	E4.4B
400 850 612 0	400 866 360 0	400 866 164 0	400 866 360 0	E4.4B

TRACTOR ABS ECU CROSS REFERENCE FOR AFTERMARKET PROGRAMMING				
Old ABS ECU Part Number	Old ABS ECU Part Number (1 Iteration Prior)	New Programmable WABCO ECU Part Number	Existing WABCO ECU Part Number (Part Number that Will Identify the Configuration File to download from http://wabco.snapon.com)	Type of ECU
400 866 237 0	400 866 360 0	400 866 164 0	400 866 360 0	E4.4B
400 850 870 0	400 866 361 0	400 866 164 0	400 866 361 0	E4.4B
400 866 006 0	400 866 361 0	400 866 164 0	400 866 361 0	E4.4B
400 850 632 0	400 866 362 0	400 866 164 0	400 866 362 0	E4.4B
400 866 007 0	400 866 362 0	400 866 164 0	400 866 362 0	E4.4B
400 850 613 0	400 866 363 0	400 866 164 0	400 866 363 0	E4.4B
400 866 238 0	400 866 363 0	400 866 164 0	400 866 363 0	E4.4B
400 866 909 0	400 866 364 0	400 866 164 0	400 866 364 0	E4.4B
400 866 906 0	400 866 365 0	400 866 164 0	400 866 365 0	E4.4B
400 850 641 0	400 866 468 0	400 866 164 0	400 866 468 0	E4.4B
400 850 663 0	400 866 468 0	400 866 164 0	400 866 468 0	E4.4B
400 850 669 0	400 866 468 0	400 866 164 0	400 866 468 0	E4.4B
400 850 671 0	400 866 468 0	400 866 164 0	400 866 468 0	E4.4B
400 850 825 0	400 866 468 0	400 866 164 0	400 866 468 0	E4.4B
N/A	400 866 164 0	400 866 164 0	401 866 468 0	E4.4B
400 866 010 0	400 866 468 0	400 866 164 0	400 866 468 0	E4.4B
N/A	400 866 530 0	400 866 164 0	400 866 530 0	E4.4B
400 866 920 0	400 866 321 0	400 866 165 0	400 866 321 0	E4.4B
400 850 710 0	400 866 322 0	400 866 165 0	400 866 322 0	E4.4B
400 866 018 0	400 866 322 0	400 866 165 0	400 866 322 0	E4.4B
400 866 074 0	400 866 324 0	400 866 165 0	400 866 324 0	E4.4B
400 850 665 0	400 866 326 0	400 866 165 0	400 866 326 0	E4.4B
400 850 804 0	400 866 326 0	400 866 165 0	400 866 326 0	E4.4B
400 850 668 0	400 866 326 0	400 866 165 0	400 866 326 0	E4.4B
400 866 019 0	400 866 326 0	400 866 165 0	400 866 326 0	E4.4B
400 866 902 0	400 866 328 0	400 866 165 0	400 866 328 0	E4.4B
N/A	400 866 518 0	400 866 165 0	400 866 518 0	E4.4B
400 850 708 0	400 866 301 0	400 866 166 0	400 866 301 0	E4.4B
400 866 012 0	400 866 301 0	400 866 166 0	400 866 301 0	E4.4B
400 850 868 0	400 866 302 0	400 866 166 0	400 866 302 0	E4.4B
400 866 013 0	400 866 302 0	400 866 166 0	400 866 302 0	E4.4B
400 850 650 0	400 866 303 0	400 866 166 0	400 866 303 0	E4.4B
400 866 014 0	400 866 303 0	400 866 166 0	400 866 303 0	E4.4B
400 866 072 0	400 866 304 0	400 866 166 0	400 866 304 0	E4.4B
400 866 039 0	400 866 305 0	400 866 166 0	400 866 305 0	E4.4B
400 866 900 0	400 866 305 0	400 866 166 0	400 866 305 0	E4.4B
400 850 651 0	400 866 307 0	400 866 166 0	400 866 307 0	E4.4B
400 850 869 0	400 866 307 0	400 866 166 0	400 866 307 0	E4.4B
400 866 015 0	400 866 307 0	400 866 166 0	400 866 307 0	E4.4B
400 850 633 0	400 866 308 0	400 866 166 0	400 866 308 0	E4.4B
400 866 016 0	400 866 308 0	400 866 166 0	400 866 308 0	E4.4B

TRACTOR ABS ECU CROSS REFERENCE FOR AFTERMARKET PROGRAMMING				
Old ABS ECU Part Number	Old ABS ECU Part Number (1 Iteration Prior)	New Programmable WABCO ECU Part Number	Existing WABCO ECU Part Number (Part Number that Will Identify the Configuration File to download from http://wabco.snapon.com)	Type of ECU
N/A	400 866 167 0	400 866 167 0	400 866 167 0	E4.4B
400 866 064 0	400 866 448 0	400 866 167 0	400 866 448 0	E4.4B
400 866 911 0	400 866 449 0	400 866 167 0	400 866 449 0	E4.4B
400 866 076 0	400 866 450 0	400 866 167 0	400 866 450 0	E4.4B
400 866 034 0	400 866 451 0	400 866 167 0	400 866 451 0	E4.4B
400 866 098 0	400 866 452 0	400 866 167 0	400 866 452 0	E4.4B
400 866 933 0	400 866 453 0	400 866 167 0	400 866 453 0	E4.4B
400 866 036 0	400 866 454 0	400 866 167 0	400 866 454 0	E4.4B
400 866 078 0	400 866 455 0	400 866 167 0	400 866 455 0	E4.4B
400 866 923 0	400 866 456 0	400 866 167 0	400 866 456 0	E4.4B
400 866 025 0	400 866 457 0	400 866 167 0	400 866 457 0	E4.4B
400 866 907 0	400 866 458 0	400 866 167 0	400 866 458 0	E4.4B
400 866 035 0	400 866 459 0	400 866 167 0	400 866 459 0	E4.4B
400 866 235 0	400 866 460 0	400 866 167 0	400 866 460 0	E4.4B
400 866 908 0	400 866 461 0	400 866 167 0	400 866 461 0	E4.4B
400 866 077 0	400 866 462 0	400 866 167 0	400 866 462 0	E4.4B
N/A	400 866 270 0	400 866 167 0	400 866 270 0	E4.4B
N/A	400 866 520 0	400 866 167 0	400 866 520 0	E4.4B
N/A	400 866 521 0	400 866 167 0	400 866 521 0	E4.4B
N/A	400 866 522 0	400 866 167 0	400 866 522 0	E4.4B
400 866 084 0	400 866 329 0	400 866 168 0	400 866 329 0	E4
400 866 231 0	400 866 330 0	400 866 168 0	400 866 330 0	E4
400 866 095 0	400 866 331 0	400 866 168 0	400 866 331 0	E4
400 866 070 0	400 866 332 0	400 866 168 0	400 866 332 0	E4
400 850 640 0	400 866 333 0	400 866 168 0	400 866 333 0	E4
400 866 075 0	400 866 333 0	400 866 168 0	400 866 333 0	E4
400 866 073 0	400 866 334 0	400 866 168 0	400 866 334 0	E4
400 866 038 0	400 866 313 0	400 866 169 0	400 866 313 0	E4
400 866 099 0	400 866 314 0	400 866 169 0	400 866 314 0	E4
400 866 085 0	400 866 315 0	400 866 169 0	400 866 315 0	E4
400 866 905 0	400 866 315 0	400 866 169 0	400 866 315 0	E4
400 866 926 0	400 866 316 0	400 866 169 0	400 866 316 0	E4
400 866 089 0	400 866 317 0	400 866 169 0	400 866 317 0	E4
400 866 910 0	400 866 317 0	400 866 169 0	400 866 317 0	E4
400 866 017 0	400 866 318 0	400 866 169 0	400 866 318 0	E4
400 866 922 0	400 866 319 0	400 866 169 0	400 866 319 0	E4
400 864 550 0	400 864 623 0	400 864 005 0	400 864 623 0	E4
400 864 501 0	400 864 623 0	400 864 005 0	400 864 623 0	E4
400 865 001 0	400 865 162 0	400 865 043 0	400 865 162 0	E4
400 865 002 0	400 865 163 0	400 865 043 0	400 865 163 0	E4
400 865 003 0	400 865 164 0	400 865 043 0	400 865 164 0	E4

TRACTOR ABS ECU CROSS REFERENCE FOR AFTERMARKET PROGRAMMING				
Old ABS ECU Part Number	Old ABS ECU Part Number (1 Iteration Prior)	New Programmable WABCO ECU Part Number	Existing WABCO ECU Part Number (Part Number that Will Identify the Configuration File to download from http://wabco.snapon.com)	Type of ECU
400 865 004 0	400 865 165 0	400 865 043 0	400 865 165 0	E4
400 866 269 0	400 865 165 0	400 866 165 0	400 865 165 0	E4
400 850 839 0	400 865 166 0	400 865 043 0	400 865 166 0	E4
400 865 005 0	400 865 166 0	400 865 043 0	400 865 166 0	E4
400 850 672 0	400 865 167 0	400 865 043 0	400 865 167 0	E4
400 850 787 0	400 865 167 0	400 865 043 0	400 865 167 0	E4
400 850 826 0	400 865 167 0	400 865 043 0	400 865 167 0	E4
400 850 836 0	400 865 167 0	400 865 043 0	400 865 167 0	E4
400 865 006 0	400 865 167 0	400 865 043 0	400 865 167 0	E4
400 865 030 0	400 865 171 0	400 865 043 0	400 865 171 0	E4
400 865 034 0	400 865 173 0	400 865 043 0	400 865 173 0	E4
N/A	400 865 203 0	400 865 043 0	400 865 203 0	E4
400 850 331 0	400 865 196 0	400 865 043 0	400 865 196 0	E4
400 865 011 0	400 865 176 0	400 865 044 0	400 865 176 0	E4
400 850 729 0	400 850 729 0	400 865 044 0	400 865 176 0	E4
400 850 827 0	400 865 177 0	400 865 044 0	400 865 177 0	E4
400 850 837 0	400 865 177 0	400 865 044 0	400 865 177 0	E4
400 865 012 0	400 865 177 0	400 865 044 0	400 865 177 0	E4
400 850 730 0	400 865 195 0	400 865 044 0	400 865 195 0	E4
400 865 039 0	400 865 145 0	400 865 045 0	400 865 145 0	E4
400 865 021 0	400 865 146 0	400 865 045 0	400 865 146 0	E4
400 865 041 0	400 865 147 0	400 865 045 0	400 865 147 0	E4
400 850 731 0	400 865 148 0	400 865 045 0	400 865 148 0	E4
400 865 009 0	400 865 148 0	400 865 045 0	400 865 148 0	E4
400 865 024 0	400 865 149 0	400 865 045 0	400 865 149 0	E4
400 865 018 0	400 865 151 0	400 865 045 0	400 865 151 0	E4
N/A	400 865 151 0	400 865 045 0	400 865 151 0	E4
N/A	400 865 183 0	400 865 045 0	400 865 183 0	E4
N/A	400 865 184 0	400 865 045 0	400 865 184 0	E4
N/A	400 865 186 0	400 865 045 0	400 865 186 0	E4
400 865 022 0	400 865 178 0	400 865 047 0	400 865 178 0	E4
400 865 023 0	400 865 179 0	400 865 047 0	400 865 179 0	E4
400 865 007 0	400 865 155 0	400 865 048 0	400 865 155 0	E4
N/A	400 865 207 0	400 865 048 0	400 865 207 0	E4
N/A	400 865 201 0	400 865 048 0	400 865 201 0	E4
400 850 829 0	400 865 159 0	400 865 013 0	400 865 159 0	E4
400 850 830 0	400 865 160 0	400 865 013 0	400 865 160 0	E4
400 850 838 0	400 865 160 0	400 865 013 0	400 865 160 0	E4
N/A	400 865 200 0	400 865 013 0	400 865 200 0	E4
400 850 334 0	400 865 158 0	400 865 013 0	400 865 158 0	E4
400 865 025 0	400 865 144 0	400 865 014 0	400 865 144 0	E4

TRACTOR ABS ECU CROSS REFERENCE FOR AFTERMARKET PROGRAMMING				
Old ABS ECU Part Number	Old ABS ECU Part Number (1 Iteration Prior)	New Programmable WABCO ECU Part Number	Existing WABCO ECU Part Number (Part Number that Will Identify the Configuration File to download from http://wabco.snapon.com)	Type of ECU
400 865 027 0	400 865 197 0	400 865 014 0	400 865 197 0	E4
N/A	400 865 204 0	400 865 015 0	400 865 204 0	E4
400 850 095 0	400 864 603 0	400 864 007 0	400 864 603 0	E4
400 850 096 0	400 864 603 0	400 864 007 0	400 864 603 0	E4
400 850 112 0	400 864 603 0	400 864 007 0	400 864 603 0	E4
400 850 147 0	400 864 603 0	400 864 007 0	400 864 603 0	E4
400 850 155 0	400 864 603 0	400 864 007 0	400 864 603 0	E4
400 850 158 0	400 864 603 0	400 864 007 0	400 864 603 0	E4
446 003 703 0	400 864 603 0	400 864 007 0	400 864 603 0	E4
446 003 720 0	400 864 603 0	400 864 007 0	400 864 603 0	E4
400 850 316 0	400 864 603 0	400 864 007 0	400 864 603 0	E4
400 850 328 0	400 864 603 0	400 864 007 0	400 864 603 0	E4
400 864 504 0	400 864 667 0	400 864 008 0	400 864 667 0	E4
400 864 502 0	400 864 668 0	400 864 008 0	400 864 668 0	E4
400 850 093 0	400 864 601 0	400 864 008 0	400 864 601 0	E4
400 850 110 0	400 864 601 0	400 864 008 0	400 864 601 0	E4
400 850 145 0	400 864 601 0	400 864 008 0	400 864 601 0	E4
400 850 153 0	400 864 601 0	400 864 008 0	400 864 601 0	E4
400 850 156 0	400 864 601 0	400 864 008 0	400 864 601 0	E4
446 003 701 0	400 864 601 0	400 864 008 0	400 864 601 0	E4
446 003 718 0	400 864 601 0	400 864 008 0	400 864 601 0	E4
400 850 094 0	400 864 602 0	400 864 008 0	400 864 602 0	E4
400 850 111 0	400 864 602 0	400 864 008 0	400 864 602 0	E4
400 850 146 0	400 864 602 0	400 864 008 0	400 864 602 0	E4
400 850 154 0	400 864 602 0	400 864 008 0	400 864 602 0	E4
400 850 157 0	400 864 602 0	400 864 008 0	400 864 602 0	E4
446 003 702 0	400 864 602 0	400 864 008 0	400 864 602 0	E4
446 003 719 0	400 864 602 0	400 864 008 0	400 864 602 0	E4
400 864 510 0	400 864 604 0	400 864 008 0	400 864 604 0	E4
400 850 315 0	400 864 662 0	400 864 008 0	400 864 662 0	E4
400 850 330 0	400 864 662 0	400 864 008 0	400 864 662 0	E4
400 850 343 0	400 864 662 0	400 864 008 0	400 864 662 0	E4
400 865 031 0	400 865 131 0	400 865 052 0	400 865 131 0	E4
400 850 707 0	400 865 134 0	400 865 052 0	400 865 134 0	E4
400 850 767 0	400 865 136 0	400 865 052 0	400 865 136 0	E4
400 865 035 0	400 865 187 0	400 865 052 0	400 865 187 0	E4
400 865 040 0	400 865 188 0	400 865 052 0	400 865 188 0	E4
446 106 225 0	400 868 103 0	400 868 007 0	400 868 103 0	E4
400 868 003 0	400 868 103 0	400 868 007 0	400 868 103 0	E4
400 869 021 0	400 868 121 0	400 868 009 0	400 868 121 0	E4
400 851 021 0	400 868 121 0	400 868 009 0	400 868 121 0	E4

TRACTOR ABS ECU CROSS REFERENCE FOR AFTERMARKET PROGRAMMING				
Old ABS ECU Part Number	Old ABS ECU Part Number (1 Iteration Prior)	New Programmable WABCO ECU Part Number	Existing WABCO ECU Part Number (Part Number that Will Identify the Configuration File to download from http://wabco.snapon.com)	Type of ECU
446 106 205 0	400 868 121 0	400 868 009 0	400 868 121 0	E4
400 868 021 0	400 868 121 0	400 868 009 0	400 868 121 0	E4
400 851 023 0	400 868 123 0	400 868 009 0	400 868 123 0	E4
400 869 023 0	400 868 123 0	400 868 009 0	400 868 123 0	E4
446 106 223 0	400 868 123 0	400 868 009 0	400 868 123 0	E4
400 868 023 0	400 868 123 0	400 868 009 0	400 868 123 0	E4
400 868 026 0	400 868 124 0	400 868 009 0	400 868 124 0	E4
400 850 301 0	400 860 100 0	400 860 000 0	400 860 100 0	E4
400 850 621 0	400 860 100 0	400 860 000 0	400 860 100 0	E4
446 106 201 0	400 860 100 0	400 860 000 0	400 860 100 0	E4
400 850 071 0	400 860 100 0	400 860 000 0	400 860 100 0	E4
400 850 302 0	400 860 100 0	400 860 000 0	400 860 100 0	E4
446 106 202 0	400 860 100 0	400 860 000 0	400 860 100 0	E4
400 850 072 0	400 860 102 0	400 860 000 0	400 860 102 0	E4
400 850 303 0	400 860 102 0	400 860 000 0	400 860 102 0	E4
400 850 351 0	400 860 102 0	400 860 000 0	400 860 102 0	E4
446 106 203 0	400 860 102 0	400 860 000 0	400 860 102 0	E4
400 850 403 0	400 860 102 0	400 860 000 0	400 860 102 0	E4
446 106 211 0	400 860 103 0	400 860 000 0	400 860 103 0	E4
400 850 307 0	400 860 104 0	400 860 000 0	400 860 104 0	E4
400 850 308 0	400 860 105 0	400 860 000 0	400 860 105 0	E4
N/A	400 860 111 0	400 860 000 0	400 860 111 0	E4
446 106 208 0	400 860 850 0	400 860 003 0	400 860 850 0	E4
446 106 209 0	400 860 851 0	400 860 003 0	400 860 851 0	E4
400 850 073 0	400 860 855 0	400 860 003 0	400 860 855 0	E4
400 850 309 0	400 860 855 0	400 860 003 0	400 860 855 0	E4
446 106 215 0	400 860 853 0	400 860 004 0	400 860 853 0	E4
N/A	400 860 853 0	400 860 004 0	400 860 853 0	E4
N/A	N/A	400 866 164 0	400 866 731 0	E4
400 850 718 0	N/A	400 865 013 0	400 850 718 0	E4
N/A	N/A	400 866 166 0	400 866 739 0	E4
N/A	N/A	400 866 167 0	400 866 794 0	E4
N/A	N/A	400 866 166 0	400 866 795 0	E4
N/A	N/A	400 865 045 0	400 865 260 0	E4
N/A	N/A	400 866 169 0	400 866 699 0	E4
N/A	N/A	400 865 043 0	400 865 254 0	E4
N/A	N/A	400 866 166 0	400 866 687 0	E4
N/A	N/A	400 866 164 0	400 866 694 0	E4
N/A	N/A	400 866 169 0	400 866 684 0	E4
N/A	N/A	400 865 014 0	400 865 058 0	E4
N/A	N/A	400 864 009 0	400 864 369 0	E4

TRACTOR ABS ECU CROSS REFERENCE FOR AFTERMARKET PROGRAMMING				
Old ABS ECU Part Number	Old ABS ECU Part Number (1 Iteration Prior)	New Programmable WABCO ECU Part Number	Existing WABCO ECU Part Number (Part Number that Will Identify the Configuration File to download from http://wabco.snapon.com)	Type of ECU
N/A	N/A	400 866 166 0	400 866 737 0	E4
N/A	N/A	400 866 166 0	400 866 738 0	E4
N/A	N/A	400 866 166 0	400 866 247 0	E4
N/A	N/A	400 866 169 0	400 866 248 0	E4
N/A	N/A	400 866 164 0	400 866 257 0	E4
N/A	N/A	400 865 043 0	400 865 257 0	E4
N/A	N/A	400 865 044 0	400 865 256 0	E4
N/A	N/A	400 866 164 0	400 866 689 0	E4
N/A	N/A	400 866 168 0	400 866 688 0	E4
N/A	N/A	400 866 164 0	400 866 736 0	E4
N/A	N/A	400 860 140 0	400 860 122 0	E4
N/A	N/A	400 860 140 0	400 860 131 0	E4
N/A	N/A	400 860 140 0	400 860 132 0	E4
N/A	N/A	400 860 140 0	400 860 133 0	E4
N/A	N/A	400 860 140 0	400 860 134 0	E4
N/A	N/A	400 860 913 0	400 860 900 0	E4
N/A	N/A	400 860 913 0	400 860 901 0	E4
N/A	N/A	400 860 914 0	400 860 904 0	E4
N/A	N/A	400 864 088 0	400 864 091 0	E4
N/A	N/A	400 864 088 0	400 864 515 0	E4
N/A	N/A	400 864 522 0	400 864 054 0	E4.8
N/A	N/A	400 864 522 0	400 864 055 0	E4.8
N/A	N/A	400 864 522 0	400 864 056 0	E4.8
N/A	N/A	400 864 522 0	400 864 057 0	E4.8
N/A	N/A	400 864 522 0	400 864 071 0	E4.8
N/A	N/A	400 864 522 0	400 864 072 0	E4.8
N/A	N/A	400 864 522 0	400 864 516 0	E4.8
N/A	N/A	400 864 522 0	400 864 517 0	E4.8
N/A	N/A	400 864 565 0	400 864 562 0	E4
N/A	N/A	400 864 565 0	400 864 575 0	E4
N/A	N/A	400 864 566 0	400 864 518 0	E4
N/A	N/A	400 864 566 0	400 864 519 0	E4
N/A	N/A	400 864 566 0	400 864 561 0	E4
N/A	N/A	400 864 566 0	400 864 574 0	E4
N/A	N/A	400 864 566 0	400 864 576 0	E4
N/A	N/A	400 865 731 0	400 865 751 0	E4
N/A	N/A	400 865 731 0	400 865 752 0	E4
N/A	N/A	400 865 731 0	400 865 753 0	E4
N/A	N/A	400 865 731 0	400 865 754 0	E4
N/A	N/A	400 865 731 0	400 865 755 0	E4
N/A	N/A	400 865 731 0	400 865 756 0	E4

TRACTOR ABS ECU CROSS REFERENCE FOR AFTERMARKET PROGRAMMING				
Old ABS ECU Part Number	Old ABS ECU Part Number (1 Iteration Prior)	New Programmable WABCO ECU Part Number	Existing WABCO ECU Part Number (Part Number that Will Identify the Configuration File to download from http://wabco.snapon.com)	Type of ECU
N/A	N/A	400 865 731 0	400 865 760 0	E4
N/A	N/A	400 865 731 0	400 865 762 0	E4
N/A	N/A	400 865 731 0	400 865 770 0	E4
N/A	N/A	400 865 731 0	400 865 772 0	E4
N/A	N/A	400 865 731 0	400 865 773 0	E4
N/A	N/A	400 865 732 0	400 865 763 0	E4
N/A	N/A	400 865 732 0	400 865 764 0	E4
N/A	N/A	400 865 732 0	400 865 769 0	E4
N/A	N/A	400 865 733 0	400 865 746 0	E4
N/A	N/A	400 865 733 0	400 865 747 0	E4
N/A	N/A	400 865 733 0	400 865 748 0	E4
N/A	N/A	400 865 735 0	400 865 765 0	E4
N/A	N/A	400 865 735 0	400 865 766 0	E4
N/A	N/A	400 865 736 0	400 865 750 0	E4
N/A	N/A	400 865 736 0	400 865 771 0	E4
N/A	N/A	400 865 736 0	400 865 774 0	E4
N/A	N/A	400 865 738 0	400 865 280 0	E4
N/A	N/A	400 865 738 0	400 865 600 0	E4
N/A	N/A	400 865 740 0	400 865 789 0	E4
N/A	N/A	400 865 743 0	400 865 803 0	E4
N/A	N/A	400 865 743 0	400 865 805 0	E4
N/A	N/A	400 865 743 0	400 865 807 0	E4
N/A	N/A	400 865 743 0	400 865 810 0	E4
N/A	N/A	400 865 743 0	400 865 275 0	E4.8
N/A	N/A	400 865 743 0	400 865 277 0	E4
N/A	N/A	400 866 166 0	400 866 263 0	E4
400 850 100 0	400 864 661 0	400 864 008 0	400 850 100 0	E4
N/A	N/A	400 864 011 0	400 864 405 0	E4
N/A	N/A	400 864 008 0	400 864 606 0	E4
N/A	N/A	400 864 008 0	400 864 607 0	E4
N/A	N/A	400 864 009 0	400 864 608 0	E4
N/A	N/A	400 864 009 0	400 864 609 0	E4
N/A	N/A	400 865 013 0	400 865 056 0	E4
N/A	N/A	400 865 014 0	400 865 284 0	E4
N/A	N/A	400 865 014 0	400 865 058 0	E4
N/A	N/A	400 866 164 0	400 866 251 0	E4
N/A	N/A	400 866 166 0	400 866 252 0	E4
N/A	N/A	400 860 000 0	400 860 119 0	E4
N/A	N/A	400 865 052 0	400 865 825 0	E4
N/A	N/A	400 866 164 0	400 866 262 0	E4
N/A	N/A	400 864 007 0	400 864 660 0	E4

TRACTOR ABS ECU CROSS REFERENCE FOR AFTERMARKET PROGRAMMING				
Old ABS ECU Part Number	Old ABS ECU Part Number (1 Iteration Prior)	New Programmable WABCO ECU Part Number	Existing WABCO ECU Part Number (Part Number that Will Identify the Configuration File to download from http://wabco.snapon.com)	Type of ECU
N/A	N/A	400 866 164 0	400 866 258 0	E4
N/A	N/A	400 866 164 0	400 866 259 0	E4
N/A	N/A	400 866 164 0	400 866 260 0	E4
N/A	N/A	400 866 164 0	400 866 261 0	E4
N/A	N/A	400 865 053 0	400 865 827 0	E4
N/A	N/A	400 865 053 0	400 865 283 0	E4
N/A	N/A	400 866 164 0	400 866 265 0	E4
N/A	N/A	400 862 009 0	400 862 228 0	E4
N/A	N/A	400 865 739 0	400 865 601 0	E4
N/A	N/A	400 865 057 0	400 865 057 0	E4
N/A	N/A	400 865 059 0	400 865 059 0	E4
N/A	N/A	400 865 602 0	400 865 602 0	E4
N/A	N/A	400 865 603 0	400 865 603 0	E4
N/A	N/A	400 866 253 0	400 866 253 0	E4
N/A	N/A	400 866 254 0	400 866 254 0	E4
N/A	N/A	400 867 071 0	400 867 001 0	E8.13
N/A	N/A	400 867 072 0	400 867 002 0	E8.13
N/A	N/A	400 867 073 0	400 867 003 0	E8.13
N/A	N/A	400 867 074 0	400 867 004 0	E8.13
N/A	N/A	400 867 075 0	400 867 005 0	E8.13
N/A	N/A	400 867 076 0	400 867 006 0	E8.13
N/A	N/A	400 867 077 0	400 867 007 0	E8.13
N/A	N/A	400 867 078 0	400 867 008 0	E8.13
N/A	N/A	400 867 079 0	400 867 009 0	E8.13
N/A	N/A	400 867 085 0	400 867 041 0	E8
N/A	N/A	400 867 086 0	400 867 042 0	E8
N/A	N/A	400 867 087 0	400 867 043 0	E8
N/A	N/A	400 867 088 0	400 867 044 0	E8
N/A	400 867 020 0	400 867 300 0	400 867 020 0	E8.13
N/A	400 867 021 0	400 867 301 0	400 867 021 0	E8.13
N/A	400 867 022 0	400 867 302 0	400 867 022 0	E8.13
N/A	400 867 023 0	400 867 303 0	400 867 023 0	E8.13
N/A	400 867 090 0	400 867 304 0	400 867 090 0	E8.13
N/A	400 867 091 0	400 867 305 0	400 867 091 0	E8.13
N/A	400 867 092 0	400 867 306 0	400 867 092 0	E8.13
N/A	400 867 093 0	400 867 307 0	400 867 093 0	E8.13
N/A	N/A	400 851 150 0	400 851 104 0	SmartTrac Hydraulic ABS
N/A	N/A	400 851 151 0	400 851 103 0	SmartTrac Hydraulic ABS
N/A	N/A	400 851 152 0	400 851 106 0	SmartTrac Hydraulic ABS
N/A	N/A	400 851 153 0	400 851 105 0	SmartTrac Hydraulic ABS
N/A	N/A	400 865 743 0	400 865 828 0	E4

TRACTOR ABS ECU CROSS REFERENCE FOR AFTERMARKET PROGRAMMING				
Old ABS ECU Part Number	Old ABS ECU Part Number (1 Iteration Prior)	New Programmable WABCO ECU Part Number	Existing WABCO ECU Part Number (Part Number that Will Identify the Configuration File to download from http://wabco.snapon.com)	Type of ECU
N/A	N/A	400 864 801 0	400 864 801 0	mBSP ECU
N/A	N/A	400 864 802 0	400 864 802 0	mBSP ECU
N/A	N/A	400 864 803 0	400 864 803 0	mBSP ECU
N/A	N/A	400 864 804 0	400 864 804 0	mBSP ECU
N/A	N/A	400 867 101 0	400 867 101 0	mBSP ECU
N/A	N/A	400 867 102 0	400 867 102 0	mBSP ECU
N/A	N/A	400 867 103 0	400 867 103 0	mBSP ECU
N/A	N/A	400 867 104 0	400 867 104 0	mBSP ECU
N/A	N/A	400 865 739 0	400 865 265 0	E4
N/A	N/A	400 865 744 0	400 865 273 0	E4
N/A	N/A	400 865 744 0	400 865 266 0	E4
N/A	N/A	400 865 744 0	400 865 273 0	E4
N/A	N/A	400 865 735 0	400 865 267 0	E4
N/A	N/A	400 867 300 0	400 867 300 0	E8.13
N/A	N/A	400 867 301 0	400 867 301 0	E8.13
N/A	N/A	400 867 302 0	400 867 302 0	E8.13
N/A	N/A	400 867 303 0	400 867 303 0	E8.13
N/A	N/A	400 867 304 0	400 867 304 0	E8.13
N/A	N/A	400 867 305 0	400 867 305 0	E8.13
N/A	N/A	400 867 306 0	400 867 306 0	E8.13
N/A	N/A	400 867 307 0	400 867 307 0	E8.13
N/A	N/A	400 867 308 0	400 867 308 0	E8
N/A	N/A	400 867 309 0	400 867 309 0	E8
N/A	N/A	400 867 310 0	400 867 310 0	E8
N/A	N/A	400 867 311 0	400 867 311 0	E8
N/A	N/A	400 867 081 0	400 867 081 0	E8
N/A	N/A	400 867 082 0	400 867 082 0	E8
N/A	N/A	400 867 083 0	400 867 083 0	E8
N/A	N/A	400 867 084 0	400 867 084 0	E8
N/A	N/A	400 867 085 0	400 867 085 0	E8
N/A	N/A	400 867 086 0	400 867 086 0	E8
N/A	N/A	400 867 087 0	400 867 087 0	E8
N/A	N/A	400 867 088 0	400 867 088 0	E8
N/A	N/A	400 865 736 0	400 865 268 0	E4
N/A	N/A	400 865 744 0	400 865 269 0	E4
N/A	N/A	400 867 071 0	400 867 071 0	E8
N/A	N/A	400 867 072 0	400 867 072 0	E8
N/A	N/A	400 867 073 0	400 867 073 0	E8
N/A	N/A	400 867 074 0	400 867 074 0	E8
N/A	N/A	400 867 075 0	400 867 075 0	E8
N/A	N/A	400 867 076 0	400 867 076 0	E8

TRACTOR ABS ECU CROSS REFERENCE FOR AFTERMARKET PROGRAMMING				
Old ABS ECU Part Number	Old ABS ECU Part Number (1 Iteration Prior)	New Programmable WABCO ECU Part Number	Existing WABCO ECU Part Number (Part Number that Will Identify the Configuration File to download from http://wabco.snapon.com)	Type of ECU
N/A	N/A	400 867 077 0	400 867 077 0	E8
N/A	N/A	400 867 078 0	400 867 078 0	E8
N/A	N/A	400 867 079 0	400 867 079 0	E8
N/A	400 867 200 0	400 867 300 0	400 867 200 0	E8
N/A	400 867 201 0	400 867 301 0	400 867 201 0	E8
N/A	400 867 202 0	400 867 302 0	400 867 202 0	E8
N/A	400 867 203 0	400 867 303 0	400 867 203 0	E8
N/A	400 867 204 0	400 867 304 0	400 867 204 0	E8
N/A	400 867 205 0	400 867 305 0	400 867 205 0	E8
N/A	400 867 206 0	400 867 306 0	400 867 206 0	E8
N/A	400 867 207 0	400 867 307 0	400 867 207 0	E8
N/A	N/A	400 867 211 0	400 867 211 0	E8.13
N/A	N/A	400 867 212 0	400 867 212 0	E8.13
N/A	N/A	400 867 213 0	400 867 213 0	E8.13
N/A	N/A	400 867 214 0	400 867 214 0	E8.13
N/A	N/A	400 867 215 0	400 867 215 0	E8.13
N/A	N/A	400 867 216 0	400 867 216 0	E8.13
N/A	N/A	400 867 320 0	400 867 320 0	E8.13
N/A	N/A	400 867 321 0	400 867 321 0	E8.13
N/A	N/A	400 867 322 0	400 867 322 0	E8.13
N/A	N/A	400 867 323 0	400 867 323 0	E8.13
N/A	N/A	400 867 324 0	400 867 324 0	E8.13
N/A	N/A	400 867 325 0	400 867 325 0	E8.13
N/A	N/A	400 867 326 0	400 867 326 0	E8.13
N/A	N/A	400 867 327 0	400 867 327 0	E8.13
N/A	N/A	400 867 113 0	400 867 113 0	mBSP ECU
N/A	N/A	400 867 114 0	400 867 114 0	mBSP ECU
N/A	N/A	400 867 115 0	400 867 115 0	mBSP ECU
N/A	N/A	400 867 116 0	400 867 116 0	mBSP ECU
N/A	N/A	400 865 744 0	400 865 272 0	E4
N/A	N/A	400 867 016 0	400 867 016 0	E8
N/A	N/A	400 867 017 0	400 867 017 0	E8
N/A	N/A	400 867 018 0	400 867 018 0	E8
N/A	N/A	400 867 024 0	400 867 024 0	E8
N/A	N/A	400 867 025 0	400 867 025 0	E8
N/A	N/A	400 867 026 0	400 867 026 0	E8
N/A	N/A	400 867 027 0	400 867 027 0	E8
N/A	N/A	400 867 028 0	400 867 028 0	E8
N/A	N/A	400 867 029 0	400 867 029 0	E8
N/A	N/A	400 851 150 0	400 851 150 0	SmartTrac Hydraulic ABS
N/A	N/A	400 851 151 0	400 851 151 0	SmartTrac Hydraulic ABS

TRACTOR ABS ECU CROSS REFERENCE FOR AFTERMARKET PROGRAMMING				
Old ABS ECU Part Number	Old ABS ECU Part Number (1 Iteration Prior)	New Programmable WABCO ECU Part Number	Existing WABCO ECU Part Number (Part Number that Will Identify the Configuration File to download from http://wabco.snapon.com)	Type of ECU
N/A	N/A	400 851 152 0	400 851 152 0	SmartTrac Hydraulic ABS
N/A	N/A	400 851 153 0	400 851 153 0	SmartTrac Hydraulic ABS
N/A	N/A	400 851 156 0	400 851 150 0	SmartTrac Hydraulic ABS
N/A	N/A	400 851 157 0	400 851 151 0	SmartTrac Hydraulic ABS
N/A	N/A	400 851 158 0	400 851 152 0	SmartTrac Hydraulic ABS
N/A	N/A	400 851 159 0	400 851 153 0	SmartTrac Hydraulic ABS
N/A	N/A	400 864 815 0	400 864 815 0	mBSP ECU
N/A	N/A	400 864 816 0	400 864 816 0	mBSP ECU
N/A	N/A	400 864 817 0	400 864 817 0	mBSP ECU
N/A	N/A	400 864 818 0	400 864 818 0	mBSP ECU
N/A	N/A	400 867 119 0	400 867 119 0	mBSP next gen. Replaced by 400 867 128 0
N/A	N/A	400 867 120 0	400 867 120 0	mBSP next gen. Replaced by 400 867 129 0
N/A	N/A	400 867 121 0	400 867 121 0	mBSP next gen. Replaced by 400 867 125 0
N/A	N/A	400 867 122 0	400 867 122 0	mBSP next gen. Replaced by 400 867 126 0
N/A	N/A	400 862 901 0	400 862 901 0	E4.9
N/A	N/A	400 862 900 0	400 862 900 0	E4.9
N/A	N/A	400 867 125 0	400 867 125 0	mBSP ECU
N/A	N/A	400 867 126 0	400 867 126 0	mBSP ECU
N/A	N/A	400 867 128 0	400 867 128 0	mBSP ECU
N/A	N/A	400 867 129 0	400 867 129 0	mBSP ECU
N/A	N/A	400 862 382 0	400 862 382 0	E4.9 (replaces 400 862 200 0 E4.8)
N/A	N/A	400 864 821 0	400 864 821 0	mBSP ECU
N/A	N/A	400 864 822 0	400 864 822 0	mBSP ECU
N/A	N/A	400 864 823 0	400 864 823 0	mBSP ECU
N/A	N/A	400 864 824 0	400 864 660 0	mBSP ECU
N/A	N/A	400 867 104 0	400 867 104 0	mBSP ECU

SK SETS	
WABCO Part Number	Meritor Part Number
400 611 000 0	R955353
400 611 007 0	R955417
400 611 001 0	R955354
400 611 002 0	R955355
400 611 003 0	R955356
400 611 004 0	R955396
400 611 005 0	R955397
400 611 006 0	R955398
400 611 007 0	R955429
400 611 008 0	R955409
400 611 009 0	R955326
400 611 010 0	R955452
400 611 011 0	R955412
400 611 012 0	R955413
400 611 013 0	R950054
400 611 014 0	R950050
400 611 015 0	R950051
400 611 016 0	R950056
400 611 017 0	R950055
400 611 018 0	R955421
400 611 019 0	R955366
400 611 020 0	R950140
400 611 021 0	R950141
400 611 022 0	R950127
400 611 023 0	R950133
400 611 024 0	R950135
400 611 025 0	R950128
400 611 026 0	R950127ST
400 611 027 0	R95013490
400 611 028 0	R950134ST
400 611 029 0	R950058
400 611 030 0	R950059
400 611 031 0	R950060
400 611 032 0	S973 011 920 2
400 611 033 0	S472 500 006 2
400 611 034 0	S472 500 007 2
400 611 035 0	R955463
400 611 036 0	S973 011 921 2
400 611 037 0	R955493
400 611 038 0	R955410
400 611 039 0	R955411
400 611 040 0	R950134
400 611 041 0	R950136
400 611 042 0	R950138

SK SETS	
WABCO Part Number	Meritor Part Number
400 611 043 0	R950139
400 611 044 0	S472 500 007 7
400 611 045 0	R950057
400 611 046 0	S810 120 025 4
400 611 047 0	R955367
400 611 048 0	R955065
400 611 049 0	R955010
400 611 050 0	R955205
400 611 051 0	R955206
400 611 052 0	R955205X
400 611 053 0	R955079X
400 611 054 0	R955300X
400 611 055 0	R955324
400 611 056 0	R950146
400 611 057 0	R955207
400 611 058 0	R955079
400 611 059 0	R955300
400 611 060 0	R955210
400 611 061 0	R955205NX
400 611 062 0	R955079NX
400 611 063 0	R955300NX
400 612 000 0	R955344
400 612 001 0	R955345
400 612 002 0	R955347
400 612 003 0	R955346
400 612 004 0	R955489
400 612 005 0	R955466
400 612 006 0	R955618
400 612 007 0	R955901
400 612 008 0	R955487
400 612 009 0	R955378
400 612 010 0	R955320
400 612 011 0	R955321
400 612 012 0	R955322
400 612 013 0	R955323
400 612 014 0	R955330
TBD	R955482
400 612 016 0	R955374
TBD	R955416
400 612 018 0	R955375
400 612 019 0	R955377
400 612 021 0	R955423
400 612 022 0	R955428
400 612 023 0	R955465

SK SETS	
WABCO Part Number	Meritor Part Number
400 612 024 0	R955471
400 612 025 0	TIABSKIT3
400 612 026 0	R955373
400 612 027 0	R955458
400 612 028 0	R955459
400 612 029 0	R955464
400 612 030 0	R955465
400 612 031 0	R955466
400 612 032 0	R955468
400 612 033 0	R955469
400 612 034 0	R955470
400 612 044 0	R955471
400 612 045 0	R955472
400 612 046 0	R955473

NOTES:

ABS REPAIR KITS	
WABCO Part Number	Meritor Part Number
441 030 900 2	R955603
441 030 901 2	R955604
441 030 902 2	R955605
441 030 903 2	R955606
441 030 904 2	R955607
441 030 905 2	R955608
441 030 906 2	R955610
441 030 907 2	R955335
441 030 908 2	R955338
441 030 909 2	R955341
441 030 910 2	R955342
441 030 912 2	R955609
441 030 913 2	R955611
441 030 914 2	R955613
441 030 915 2	R955617
441 030 916 2	R955328
441 030 917 2	R955329
441 030 918 2	R955336
441 030 919 2	R955337
441 030 920 2	R955349
441 030 922 2	R955399
441 030 923 2	R955400
441 030 924 2	R955438
441 035 941 2	R955615

REMAN AND SERVICE EXCHANGE				
WABCO Part Number	Old Meritor Part Number	Service Exchange or Reman	WABCO Core Number	Part Description
432 413 024 7	S432 413 024 7	Service Exchange	432 421 009 9	Air Dryer - 1200P/COAL/12V/TCV
432 471 100 7	S432 471 100 7	Service Exchange	432 470 100 9	Air Dryer - SS1200 Plus/Std/TCV
RWABK118S	SRWABK118N	Service Exchange	432 413 001 9	Air Dryer - SS1200/Standard/12V
RWABK119S	SRWABK119N	Service Exchange	432 413 001 9	Air Dryer - SS1200/Standard/24V
432 413 017 7	S432 413 017 7	Service Exchange	432 413 007 9	Air Dryer - SS1200U/Standard/12V
432 421 052 7	S432 421 052 7	Service Exchange	432 421 011 9	Air Dryer - SS1800UP/Coalescing
432 480 341 7	S432 480 341 7	Service Exchange	432 480 340 9	Air Dryer HP - Coalescing/TCV
432 480 301 7	n/a	Service Exchange	432 480 340 9	Air Dryer HP - Coalescing/TCV, Volvo
432 413 010 7	S432 413 010 0	Service Exchange	432 413 006 9	Air Dryer -SS1200E/Std/12V/TCV
432 421 054 7	S432 421 054 7	Service Exchange	432 421 009 9	Air Dryer -SS1800P/Coalescing/TCV
432 471 001 7	S4324 710 01 7	Service Exchange	432 470 000 9	Air Dryer-SS1200 Plus/Coalescing
432 421 033 7	S432 421 033 7	Service Exchange	432 421 011 9	Air Dryer-SS1200UP/Coalescing/12V
432 421 048 7	S432 421 048 7	Service Exchange	432 421 009 9	AirDryer - 1200P/COAL/12V/TCV
432 421 039 R	S432 421 054 0X	Reman	432 421 009 9	Air Dryer SysS 1800P w/TCV w/coal-
432 421 038 R	S432 421 052 0X	Reman	432 421 011 9	Air Dryer SysS 1800UP w/coal-
432 413 006 R	S432 413 010 7	Reman	432 413 006 9	Air Dryer SysS E Regen w/TCV-
432 421 010 R	S432 413 025 0X	Reman	432 421 009 9	Air Dryer SysS P 24V w/TCV-
432 421 009 R	S432 413 024 0X	Reman	432 421 009 9	Air Dryer SysS P w/TCV-
432 421 037 R	S432 421 048 0X	Reman	432 421 009 9	Air Dryer SysS P w/TCV w/coal-
432 470 021 R	S432 470 021 0X	Reman	432 470 000 9	Air Dryer SysS Plus 24V w/coal-
432 471 100 R	S432 471 100 0X	Reman	432 470 100 9	Air Dryer SysS Plus w/TCV-
432 471 101 R	S432 471 101 0X	Reman	432 470 100 9	Air Dryer SysS Plus w/TCV w/coal-
432 413 007 R	S432 413 017 0X	Reman	432 413 007 9	Air Dryer SysS Regen-
432 413 002 R	SRWABK119	Reman	432 413 001 9	Air Dryer SysS Regen 24V w/TCV-
432 413 001 R	SRWABK118	Reman	432 413 001 9	Air Dryer SysS Regen w/TCV-
432 433 011 R	S432 433 041 0X	Reman	432 433 006 9	Air Dryer SysS Twin w/coal 24V-0.8mm-
432 433 008 R	S432 433 038 0X	Reman	432 433 006 9	Air Dryer SysS Twin w/coal 24V-1.0mm-
432 433 010 R	S432 433 040 0X	Reman	432 433 006 9	Air Dryer SysS Twin w/coal-0.8mm-
432 433 006 R	S432 433 036 0X	Reman	432 433 006 9	Air Dryer SysS Twin w/coal-1.0mm-
432 421 011 R	S432 421 015 0X	Reman	432 421 011 9	Air Dryer SysS UP-
432 421 032 R	S432 421 033 0X	Reman	432 421 011 9	Air Dryer SysS UP w/coal-
432 480 340 7	S432 480 340 7	Service Exchange	432 480 340 9	Air Dryer HP- Standard/TCV
912 125 000 7	S912 125 000 7	Service Exchange	912 125 000 9	Compressor - 1 Cyl/238cc/Deere
911 154 518 7	S911 154 518 7	Service Exchange	911 154 518 9	Compressor - 1 Cyl/247cc/CAT
412 352 025 7	S412 352 025 7	Service Exchange	412 352 025 9	Compressor - 1 Cyl/352cc/DDC
911 153 055 7	S911 153 055 7	Service Exchange	911 153 055 9	Compressor -1 Cyl/318cc/Mack ASET
911 515 008 7	S911 515 008 7	Service Exchange	911 515 005 9	Compressor -2 Cyl/636cc/Mack HDEP
411 141 506 7	n/a	Service Exchange	411 141 506 9	Compressor-1 Cyl, 159cc
411 141 011 7	S411 141 011 7	Service Exchange	411 414 000 9	Compressor-1 Cyl/159cc/Deere
912 142 002 V	S912 142 002 7	Reman	912 142 001 9	Compressor-1 Cyl, 318cc
912 142 002 R	S912 142 002 0X	Service Exchange	912 142 001 9	Compressor-1 Cyl, 318cc,
911 153 055 R	S911 153 055 0X	Reman	911 153 055 9	Compressor-1 Cyl, 318cc, Mack,
912 218 002 7	S912 218 002 7	Service Exchange	912 218 000 9	Compressor-1 Cyl, 440cc, PACCAR, MX-13
912 218 000 7	S912 218 000 7	Service Exchange	912 218 000 9	Compressor-1Cyl 440cc PACCAR MX-13 Serv Repl

REMAN AND SERVICE EXCHANGE				
WABCO Part Number	Old Meritor Part Number	Service Exchange or Reman	WABCO Core Number	Part Description
912 518 106 7	S912 518 106 7	Service Exchange	912 518 106 9	Compressor-2 Cyl, 476cc, PACCAR, MX-11
912 518 108 7	S912 518 108 7	Service Exchange	912 518 108 9	Compressor-2 Cyl, 476cc, PACCAR, MX-13
912 518 108 R	S912 518 108 0X	Reman	912 518 108 9	Compressor-2 Cyl, 476cc, PACCAR, MX-13
912 542 007 V	S912 542 007 0X	Service Exchange	912 512 029 9	Compressor-2 Cyl, 636cc, Mack
912 518 107 7	S912 518 107 7	Service Exchange	912 518 106 9	Compressor-2 Cyl, 636cc, PACCAR, MX-11
912 518 105 7	S912 518 105 7	Service Exchange	912 518 108 9	Compressor-2 Cyl, 636cc, PACCAR, MX-13
912 512 029 V	S912 512 029 7	Service Exchange	912 512 029 9	Compressor-2 Cyl, 636cc, Volvo
912 512 029 R	S912 512 029 0X	Reman	912 512 029 9	Compressor-2 Cyl, 636cc, Volvo,
912 542 007 R	S912 542 007 R	Reman	912 512 029 9	Compressor-2 Cyl, 636cc, Volvo,
912 518 112 7	S912 518 112 7	Service Exchange	912 518 108 9	Compressor-2Cyl 636cc PACCAR MX-13 Serv Repl
400 851 875 7	S400 851 875 7	Service Exchange	400 851 875 9	Hydraulic Power Brake Module
400 851 876 7	S400 851 876 7	Service Exchange	400 851 876 9	Hydraulic Power Brake Module
400 851 877 7	S400 851 877 7	Service Exchange	400 851 877 9	Hydraulic Power Brake Module
400 851 881 7	S400 851 881 7	Service Exchange	400 851 881 9	Hydraulic Power Brake Module
400 851 884 7	S400 851 884 7	Service Exchange	400 851 884 9	Hydraulic Power Brake Module-500k
400 851 885 7	S400 851 885 7	Service Exchange	400 851 885 9	Hydraulic Power Brake Module-500k
400 851 886 7	S400 851 886 7	Service Exchange	400 851 886 9	Hydraulic Power Brake Module-500k
400 851 875 X	S400 851 875 0X	Reman	400 851 875 9	Hydraulic Power Brake -WET 10 R2 ATC
400 851 877 X	S400 851 877 0X	Reman	400 851 877 9	Hydraulic Power Brake -WET 10 R2 ATC PB
400 852 877 7	S400 852 878 0X	Service Exchange	400 852 877 9	Hydraulic Power Brake -WET 10 R2 ATC PB
400 852 877 X	S400 852 877 0X	Reman	400 852 877 9	Hydraulic Power Brake WET 10 R2 ATC PB Wrkhs Rel1 ECU
400 851 876 x	S400 851 876 0X	Reman	400 851 876 9	Hydraulic Power Brake -WET 8 R2
961 899 211 7	S961 899 211 7	Service Exchange	961 899 211 9	Pedal Assembly - Brake Valve
976 000 105 7	S976 000 105 7	Service Exchange	976 000 105 9	Relay Valve Package
976 000 107 7	S976 000 107 7	Service Exchange	976 000 111 9	Relay Valve Package
400 500 104 7	S400 500 104 7	Service Exchange	400 500 101 9	Trailer ABS - 2S1M
400 500 104 7	S400 500 104 7	Service Exchange	400 500 101 9	Trailer ABS - 2S1M
400 500 102 7	S400 500 102 7	Service Exchange	400 500 102 9	Trailer ABS - 2S2M
400 500 103 7	S400 500 103 7	Service Exchange	400 500 103 9	Trailer ABS - 2S2M-4S3M
400 500 103 7	S400 500 103 7	Service Exchange	400 500 103 9	Trailer ABS - 2S2M-4S3M
446 108 201 7	S446 108 201 7	Service Exchange	446 108 201 9	Trailer ABS ECU Only - 2S1M
446 108 201 7	S446 108 201 7	Service Exchange	446 108 201 9	Trailer ABS ECU Only - 2S1M
446 108 204 7	S446 108 204 7	Service Exchange	446 108 201 9	Trailer ABS ECU Only - 2S1M
446 108 204 7	S446 108 204 7	Service Exchange	446 108 201 9	Trailer ABS ECU Only - 2S1M
400 850 600 7	S400 850 600 7	Service Exchange	446 108 201 9	Trailer ABS ECU Only - 2S2M
400 850 600 7	S400 850 600 7	Service Exchange	446 108 201 9	Trailer ABS ECU Only - 2S2M
400 850 601 7	S400 850 601 7	Service Exchange	446 108 203 9	Trailer ABS ECU Only - 2S2M-4S3M
400 850 601 7	S400 850 601 7	Service Exchange	446 108 201 9	Trailer ABS ECU Only - 2S2M-4S3M
400 850 602 7	S400 850 602 7	Service Exchange	446 108 201 9	Trailer ABS Modulator Valve Kit
400 850 602 7	S400 850 602 7	Service Exchange	446 108 201 9	Trailer ABS Modulator Valve Kit
400 500 101 7	S400 500 101 7	Service Exchange	400 500 101 9	Trailer ABS - 2S1M
400 500 101 7	S400 500 101 7	Service Exchange	400 500 101 9	Trailer ABS - 2S1M
400 500 102 7	S400 500 102 7	Service Exchange	400 500 102 9	Trailer ABS - 2S2M
400 500 103 R	S400 500 103 0X	Reman	400 500 103 9	Trailer ABS, 2S/2M - 4S/3M,

REMAN AND SERVICE EXCHANGE				
WABCO Part Number	Old Meritor Part Number	Service Exchange or Reman	WABCO Core Number	Part Description
400 500 104 R	S400 500 104 0X	Reman	400 500 101 9	Trailer ABS, 2S1M MAR,
400 500 101 R	S400 500 101 0X	Reman	400 500 101 9	Trailer ABS, 2S1M MSH,
400 500 102 R	S400 500 102 0X	Service Exchange	400 500 102 9	Trailer ABS, 2S2M,

WABCO

The OE Choice

Original Parts
OE Premium Quality

WABCO REMAN SOLUTIONS

Restored to Original Performance

ECO LOGICAL NOMICAL

Remanufactured Parts
Delivering OE Quality

ProVia™

Performance, Reliability and Value

All-Makes
Aftermarket Parts

WABCO

Enabling Quality Repairs

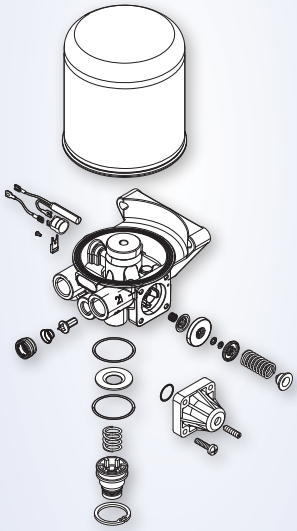

Repair Kits
OE Quality
Components

About ZF Friedrichshafen AG

ZF is a global technology company and supplies systems for passenger cars, commercial vehicles and industrial technology, enabling the next generation of mobility. ZF allows vehicles to see, think and act. In the four technology domains Vehicle Motion Control, Integrated Safety, Automated Driving, and Electric Mobility, ZF offers comprehensive solutions for established vehicle manufacturers and newly emerging transport and mobility service providers. ZF electrifies different kinds of vehicles. With its products, the company contributes to reducing emissions and protecting the climate.

ZF, which acquired WABCO Holdings Inc. on May 29, 2020, now has 162,000 employees worldwide with approximately 260 locations in 41 countries. In 2019, the two then-independent companies achieved sales of €36.5 billion (ZF) and $3.4 billion (WABCO).

For more information, visit **www.wabco-na.com**

Contact the WABCO Customer Care Center at
855-228-3203 or **wnacustomercare@wabco-auto.com**

© 2020 WABCO North America LLC - All rights reserved - PB19028 / 07.2020

WABCO